AUTOMATIC TRANSMISSION

CONTENTS

SERVICE SPECIFICATIONS 2

LUBRICANTS 2

SEALANTS AND ADHESIVES 2

SPECIAL TOOLS 3

TROUBLESHOOTING <A/T> 4

TROUBLESHOOTING <A/T KEY INTERLOCK AND SHIFT LOCK MECHANISMS> 32

ON-VEHICLE SERVICE 35

- Essential Service 35
- Transfer Oil Check 40
- Transfer Oil Replacement 40
- A/T Control Component Location 41
- A/T Control Component Check 42
- Converter Stall Test 45
- Hydraulic Pressure Test 46
- Hydraulic Circuit 47
- Selector Lever Operation Check 48
- Transmission Control Cable Adjustment 50

TRANSMISSION CONTROL* 51

A/T KEY INTERLOCK AND SHIFT LOCK MECHANISMS <VEHICLES FOR HONG KONG> 55

TRANSMISSION ASSEMBLY 57

TRANSMISSION OIL COOLER 60

A/T-ECU 61

4WD INDICATOR CONTROL UNIT 61

WARNING REGARDING SERVICING OF SUPPLEMENTAL RESTRAINT SYSTEM (SRS) EQUIPPED VEHICLES

WARNING!

(1) Improper service or maintenance of any component of the SRS, or any SRS-related component, can lead to personal injury or death to service personnel (from inadvertent firing of the air bag) or to driver and passenger (from rendering the SRS inoperative).

(2) Service or maintenance of any SRS component or SRS-related component must be performed only at an authorized MITSUBISHI dealer.

(3) MITSUBISHI dealer personnel must thoroughly review this manual, and especially its GROUP 52B – Supplemental Restraint System (SRS) before beginning any service or maintenance of any component of the SRS or any SRS-related component.

NOTE

The SRS includes the following components: SRS-ECU, SRS warning lamp, air bag module, clock spring, and interconnecting wiring. Other SRS-related components (that may have to be removed/installed in connection with SRS service or maintenance) are indicated in the table of contents by an asterisk (*).

SERVICE SPECIFICATIONS

Items				Standard value
Clearance between inner cable stopper and dust cover end surface mm				0.8 – 1.5
Input shaft speed sensor resistance (at 20°C) Ω				620 ± 60
Output shaft speed sensor resistance (at 20°C) Ω				430 ± 43
A/T fluid temperature sensor resistance Ω	at 25°C			1,100
	at 120°C			57
Coil resistance of solenoid valve No.1 (at 25°C) Ω				13 ± 2
Coil resistance of solenoid valve No.2 (at 25°C) Ω				13 ± 2
Coil resistance of solenoid valve No.3 (at 25°C) Ω				13 ± 2
Stall speed r/min		4G1		2,030 – 2,330
		4G9		2,320 – 2,620
Line pressure kPa	at idle speed	4G1	D range	363 – 402
			R range	500 – 559
		4G9	D range	373 – 422
			R range	520 – 579
	at idle speed	4G1	D range	726 – 824
			R range	1,255 – 1,500
		4G9	D range	765 – 863
			R range	1,383 – 1,628

LUBRICANTS

Items	Specified lubricant	Quantity ℓ
Transmission fluid	Dexron II or equivalent	7.2
Transfer oil	Hypoid gear oil SAE 75W-90, 75W-85W or 80W confirming to API GL-4	2.3

SEALANTS AND ADHESIVES

Items	Specified sealant	Remarks
Transfer control lever gasket	3M ATD Part No.8660 or equivalent	Semi-drying sealant
Transfer control lever assembly installation bolt	3M Stud Locking No.4170 or equivalent	Anaerobic sealant

SPECIAL TOOLS

Tool	Number	Name	Use
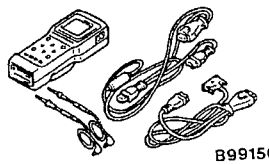 B991502	MB991502	MUT-II sub assembly	Checking of the diagnosis code
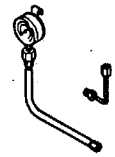	MD998330 (including MD998331)	Oil pressure gauge (2,942 kPa)	Measurement of oil pressure
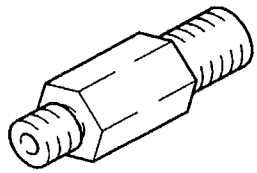	MD998920	Adapter	Connection of oil pressure gauge

TROUBLESHOOTING <A/T>

STANDARD FLOW OF DIAGNOSIS TROUBLESHOOTING

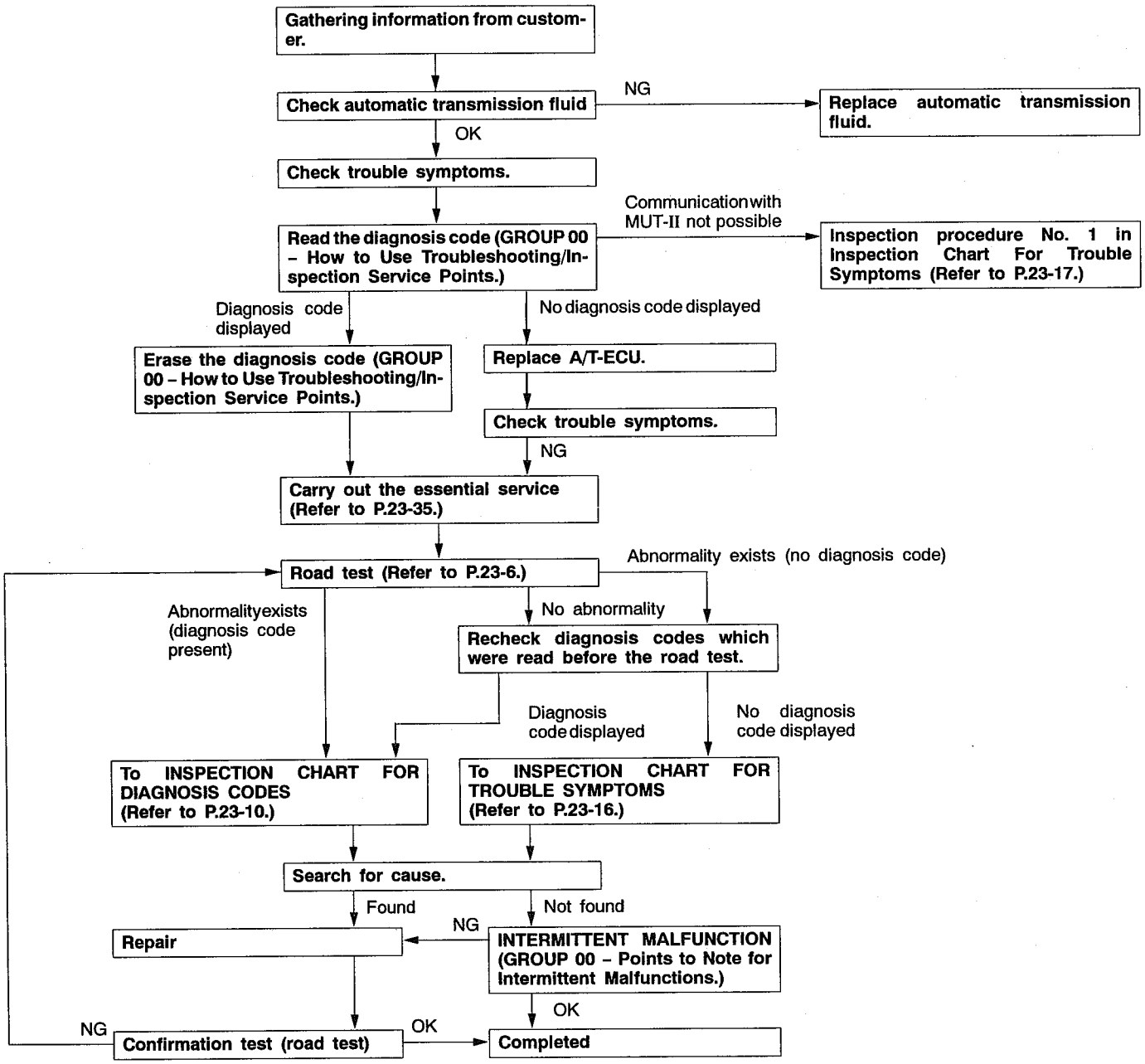

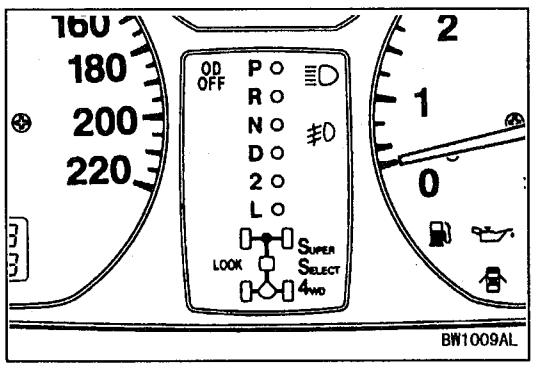

DIAGNOSIS FUNCTION

N RANGE LAMP

The N range lamp flashes at a frequency of approximately 1 Hz if there is an abnormality in any of the items in the table below which are related to the A/T system. Check the diagnosis code output if the N range lamp is flashing at a frequency of approximately 1 Hz.

N range lamp flashing items

Input shaft speed sensor
Output shaft speed sensor
Each solenoid valve

Caution
If the N range lamp is flashing at a frequency of approximately 2 Hz (faster than at 1 Hz), it means that the automatic transmission fluid temperature is too high. Stop the vehicle in a safe place and wait until the N range lamp switches off.

METHOD OF READING THE DIAGNOSIS CODE

Use the MUT-II or the N range lamp to take a reading of the diagnosis codes. (Refer to GROUP 00 – How to Use Troubleshooting/Inspection Service Points.)

ROAD TEST

No.	State prior to test and operation	Test and operation	Judgement value	Check item	Inspection item if there is an abnormality
1	Ignition switch: ON Engine: Stopped	Ignition switch (1) ON (2) OFF	Data list No. 12 (1) Approx. 5V (2) 0V	TPS (Power supply voltage)	Code No.12, 13 TPS system <MPI> (P.23-11)
			Data list No. 14 (1) Approx. 5V (2) 0V	APS (Power supply voltage)	Code No.13, 14 APS system <GDI> (P.23-11)
		Overdrive switch (1) ON (2) OFF	Data list No. 35 (1) OD (2) OD-OFF	Overdrive switch	Overdrive switch system (P.23-25)
		Selector lever position (1) P (2) R (3) N (4) D (5) 2 (6) L	Data list No. 37 (1) P, R, D (2) P, R, D (3) N (4) P, R, D (5) 2 (6) L	Inhibitor switch	Inhibitor switch system (P.23-25)
		Brake pedal (1) Depressed (2) Released	Data list No. 28 (1) ON (2) OFF	Stop lamp switch	Stop lamp switch system (P.23-26)
2	Ignition switch: ST Engine: Stopped	Starting test with selector lever P or N position	Starting should be possible	Starting possible or impossible	Does not move (P.23-18)
					Lockup malfunction (P.23-24)
3	Engine: Warmed up	Drive for 15 minutes or more so that the automatic fluid temperature becomes 70 – 90°C.	Data list No. 15 Gradually rises to 70 – 90°C	A/T fluid temperature sensor	A/T fluid temperature sensor system (P.23-12)
4	Engine: Idling Selector lever position: N	Accelerator pedal (1) Released (2) Half depressed (3) Fully depressed (approx. 2 seconds)	Data list No. 13 (1) 0 – 5 % (2) Gradually rises from (1) (3) 85 – 100 %	TPS, APS (Throttle opening angle)	Code No.12, 13 TPS system <MPI> (P.23-11) Code No.13, 14 APS system <GDI> (P.23-11)
		Selector lever position (1) N → D (2) N → R	Should be no abnormal shifting shocks Time lag should be within 2 seconds	Does not move	Does not move forward and reverse (P.23-18)
					Does not move forward only (P.23-18)
					Does not reverse only (P.23-19)
				Shocks when shifting	Large shocks (P.23-22)
5	Engine: Idling (Vehicle stopped) Selector lever position: D	Accelerator pedal (1) Released	Data list No. 27 (1) 1st	Solenoid valve No.1	Code No.41, 42 Solenoid valve No.1 system (P.23-14)
				Solenoid valve No.2	Code No.43, 44 Solenoid valve No.2 system (P.23-14)

No.	State prior to test and operation	Test and operation	Judgement value	Check item	Inspection item if there is an abnormality
6	Selector lever position: D Overdrive switch: OFF	Shift position and vehicle speed (1) Idling (Vehicle stopped) (2) Driving at 5 km/h (3) Driving at constant speed of 50 km/h (20 seconds or more) (4) Driving at constant speed of 40 km/h with the selector lever in 2 position	Data list No. 27 (1) 1st (2) 1st (3) 3rd (4) 2nd	Solenoid valve No.1	Code No.41, 42 Solenoid valve No.1 system (P.23-14)
				Solenoid valve No.2	Code No.43, 44 Solenoid valve No.2 system (P.23-14)
			Data list No. 31 (3) 1,800 – 2,000 rpm	Input shaft speed sensor	Input shaft speed sensor system (P.23-12)
			Data list No. 32 (3) 1,800 – 2,000 rpm	Output shaft speed sensor	Output shaft speed sensor system (P.23-12)
			Data list No. 41 (2) ON (3) OFF (4) ON	Solenoid valve No.1	Code No.41, 42 Solenoid valve No.1 system (P.23-14)
			Data list No. 43 (2) OFF (3) ON (4) ON	Solenoid valve No.2	Code No.43, 44 Solenoid valve No.2 system (P.23-14)
			Data list No. 47 (1) OFF (2) OFF (3) ON (4) Accelerates smoothly and no abnormal shocks should occur.	Solenoid valve No.3 Malfunction when shifting	Code No.47, 48 Solenoid valve No.3 system (P.23-14) Shifting point abnormality (P.23-20)
					Slippage (vibration) (P.23-23)
7	Selector lever position: D Overdrive switch: ON	Shift position and vehicle speed (1) Driving at constant speed of 50 km/h (20 seconds or more)	Data list No. 27 (1) 4th	Solenoid valve No.1	Code No.41, 42 Solenoid valve No.1 system (P.23-14)
				Solenoid valve No.2	Code No.43, 44 Solenoid valve No.2 system (P.23-14)
			Data list No. 41 (1) OFF	Solenoid valve No.1	Code No.41, 42 Solenoid valve No.1 system (P.23-14)
			Data list No. 43 (1) OFF	Solenoid valve No.2	Code No.43, 44 Solenoid valve No.2 system (P.23-14)

No.	State prior to test and operation	Test and operation	Judgement value	Check item	Inspection item if there is an abnormality
8	Selector lever position: D Overdrive switch: ON	Monitor data list No. 13, 27, and 32 with the MUT-II. (1) Accelerate to 4th gear at TPS and APS opening angle of 30 %. (2) Gently decelerate to a standstill. (3) Accelerate to 4th gear at TPS and APS opening angle of 50 %. (4) While driving at 50 km/h in 4th gear, set the overdrive switch to OFF position. (5) While driving at 50 km/h in 3rd gear, move the selector lever to 2 position. (6) While driving at 20 km/h in 2nd gear, move the selector lever to L position.	For (1), (2) and (3), the reading should be the same as the specified output shaft speed (vehicle speed) and no abnormal shocks should occur. For (4), (5) and (6), downshifting should occur immediately after the shifting operation is made.	Malfunction when shifting	Upshifting does not occur (P.23-19)
					Downshifting does not occur (P.23-20)
					Shifting point abnormality (P.23-20)
					Upshifting occurs spontaneously (P.23-21)
					Incorrect starting drive gear position (P.23-21)
				Malfunction when driving the vehicle	Large shocks (P.23-22)
					Slippage (vibration) (P.23-23)
					Lockup malfunction (P.23-24)
					Abnormal engine braking (P.23-24)

SHIFT PATTERN

4G1 D range (Overdrive switch: ON)

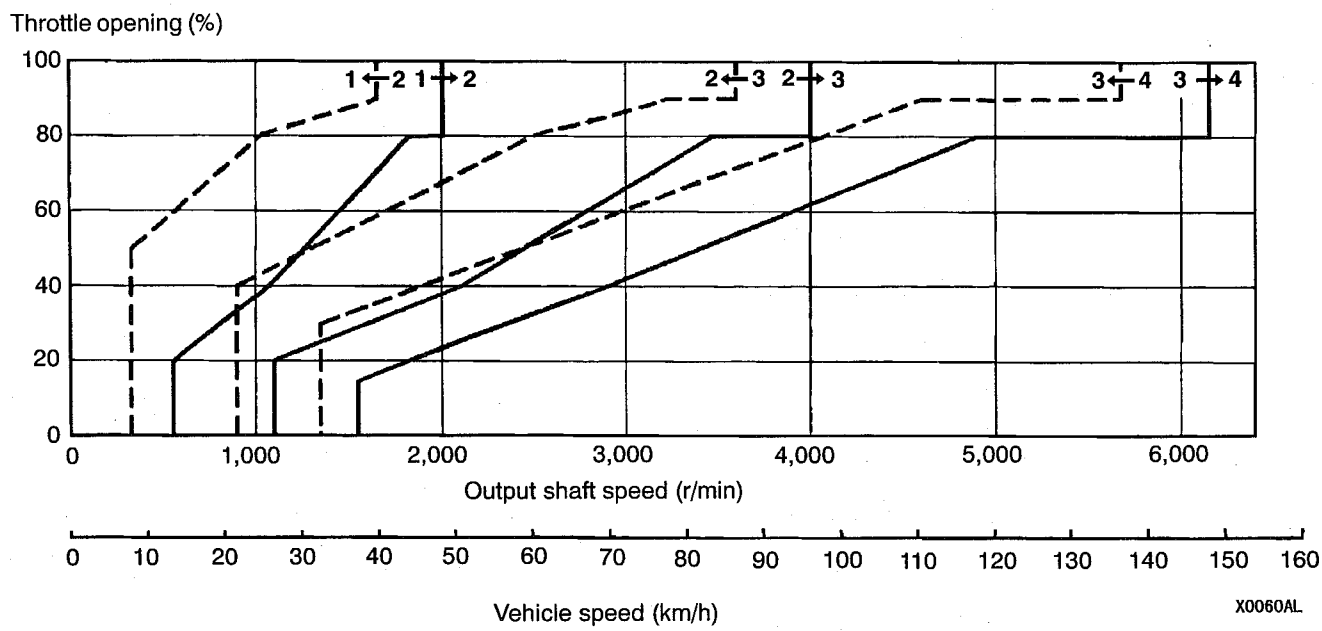

4G9 D range (Overdrive switch: ON)

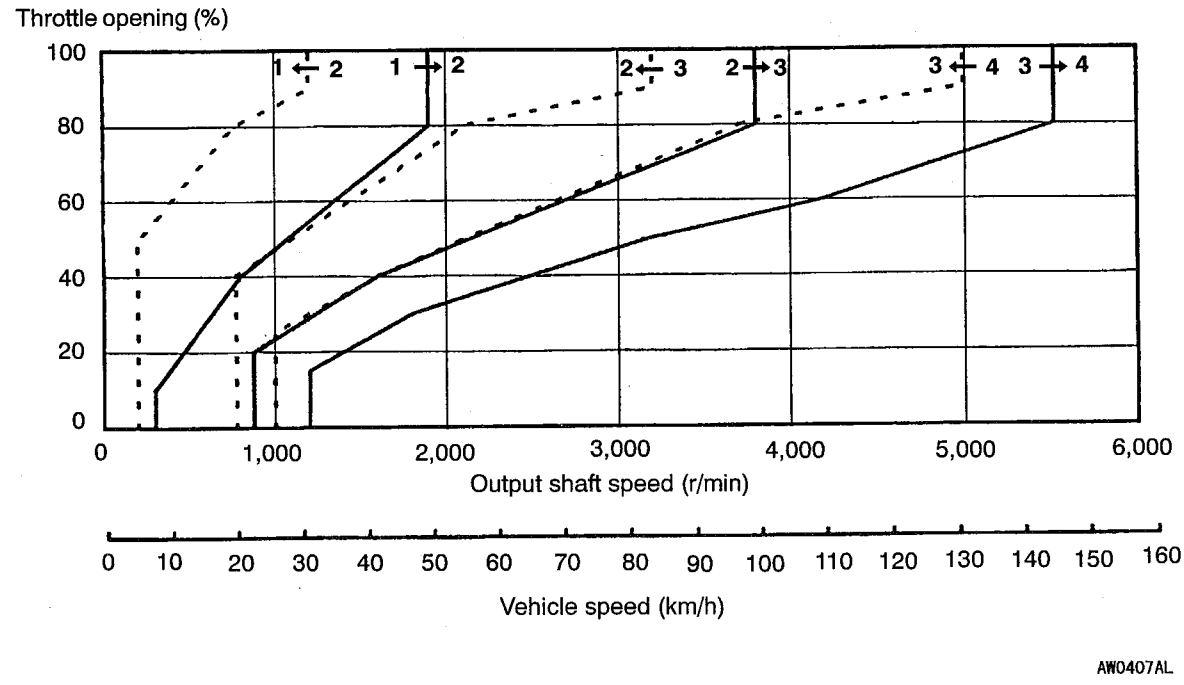

INSPECTION CHART FOR DIAGNOSIS CODE

Code	Diagnosis item		Reference page
12	Throttle position sensor system <MPI> (Throttle power supply voltage)	Open circuit, short circuit	23-11
13	Throttle position sensor system <MPI>, Accelerator pedal position sensor system <GDI> (Throttle opening voltage)	Sensor malfunction, open circuit, short circuit	23-11
14	Accelerator pedal position sensor system <GDI> (Throttle power supply voltage)	Open circuit, short circuit	23-11
15	A/T fluid temperature sensor system	Open circuit	23-12
16	A/T fluid temperature sensor system	Short circuit	23-12
31	Input shaft speed sensor system	Open circuit	23-12
32	Output shaft speed sensor system	Open circuit	23-12
38	Vehicle speed sensor system	Open circuit	23-13
41	Solenoid valve No.1 system	Open circuit	23-14
42	Solenoid valve No.1 system	Short circuit	23-14
43	Solenoid valve No.2 system	Open circuit	23-14
44	Solenoid valve No.2 system	Short circuit	23-14
47	Solenoid valve No.3 system	Open circuit	23-14
48	Solenoid valve No.3 system	Short circuit	23-14
55	Abnormal communication with engine-ECU	Open circuit	23-15

INSPECTION PROCEDURES FOR DIAGNOSIS CODES

Code No. 12, 13 Throttle position sensor (TPS) system <MPI>	Probable cause
If the TPS output voltage (TPS opening voltage) is 5.335 V or higher <4G1>, 5.435 V or higher <4G9> when the engine is idling, the output voltage is judged to be too high and diagnosis code No. 13 is output. If the TPS output voltage (TPS opening voltage) is 0.135 V or lower <4G1>, 0.335 V or lower <4G9> when the engine is idling, the output voltage is judged to be too low and diagnosis code No. 13 is output. If the TPS output voltage (TPS power supply voltage) is 3.0 V or lower or if it is 5.7 V or higher when the engine is idling, the TPS is judged to be faulty and diagnosis code No. 12 is output.	• Malfunction of the throttle position sensor • Malfunction of harness or connector • Malfunction of the A/T-ECU

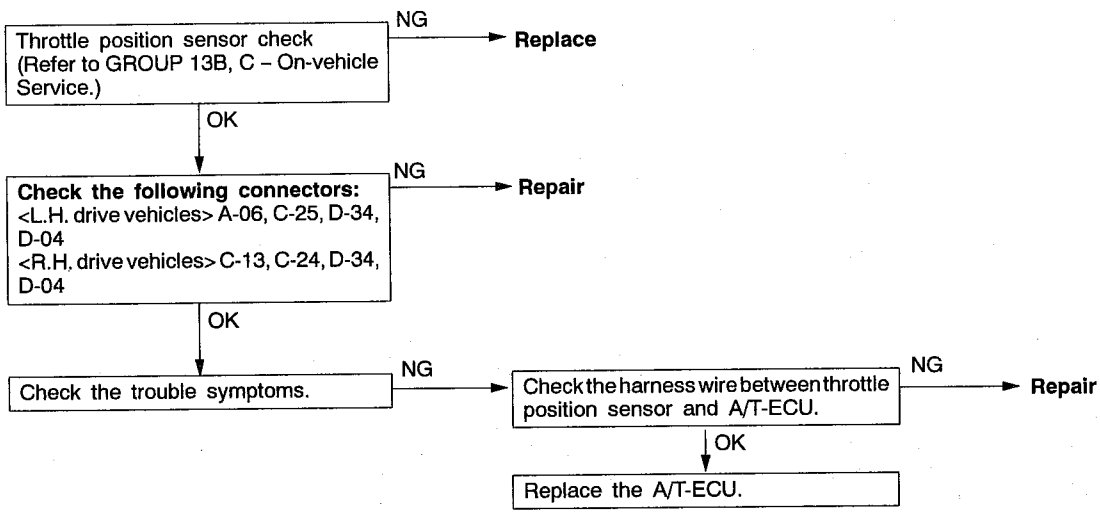

Code No. 13, 14 Accelerator pedal position sensor (APS) <GDI>	Probable cause
If the APS output voltage (APS opening voltage) is 4.8 V or higher when the engine is idling, the output voltage is judged to be too high and diagnosis code No. 13 is output. If the APS output voltage (APS opening voltage) is 0.335 V or lower when the engine is idling, the output voltage is judged to be too low and diagnosis code No. 13 is output. If the APS output voltage (APS power supply voltage) is 3.0 V or lower or if it is 5.7 V or higher when the engine is idling, the APS is judged to be faulty and diagnosis code No. 14 is output.	• Malfunction of the accelerator pedal position sensor • Malfunction of harness or connector • Malfunction of the A/T-ECU

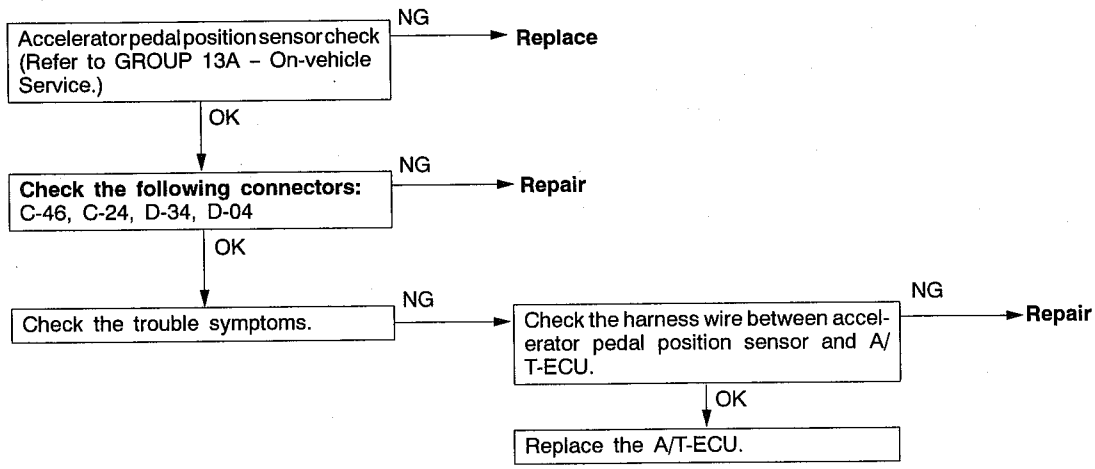

Code No. 15, 16 A/T fluid temperature sensor system	Probable cause
If the A/T fluid temperature sensor output is 10°C or less (5.6 kΩ or more) even after running the engine for 15 minutes or more, it is judged that there is an open circuit in the A/T fluid temperature sensor and diagnosis code No. 15 is output. If the A/T fluid temperature sensor output is 240°C or more (10 Ω or less), it is judged that there is a short circuit in the A/T fluid temperature sensor and diagnosis code No. 16 is output.	• Malfunction of the A/T fluid temperature sensor • Malfunction of harness or connector • Malfunction of the A/T-ECU

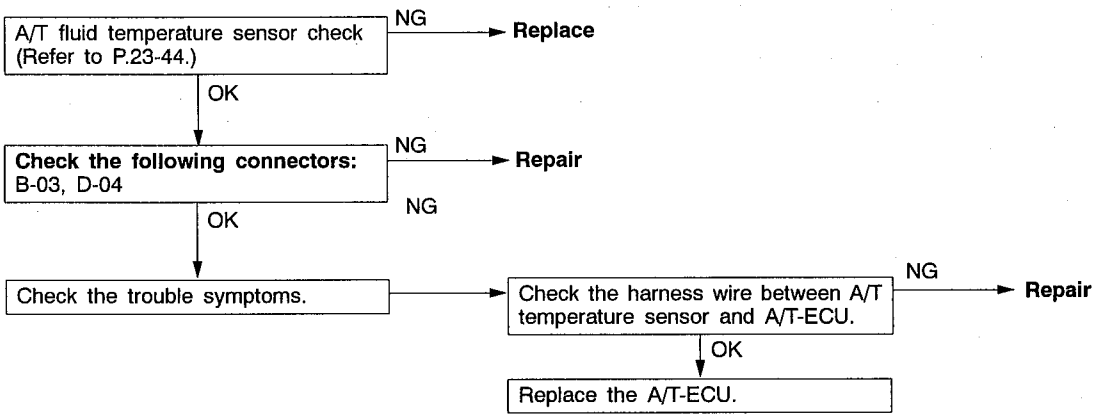

Code No. 31, 32 Input shaft speed sensor system, output shaft speed sensor system	Probable cause
If no output pulse is detected from the input shaft speed sensor for 120 seconds or more while driving in 3rd gear at a speed of 60 km/h or more, there is judged to be an open circuit in the input shaft speed sensor and diagnosis code No. 31 is output. If no output pulse is detected from the output shaft speed sensor for 120 seconds or more while driving in 3rd gear at a speed of 60 km/h or more, there is judged to be an open circuit in the output shaft speed sensor and diagnosis code No. 32 is output.	• Malfunction of the input shaft speed sensor or output shaft speed sensor • Malfunction of harness or connector • Malfunction of the sensor rotor • Malfunction of A/T-ECU • Electrical noise

★: Refer to the Transmission Workshop Manual.

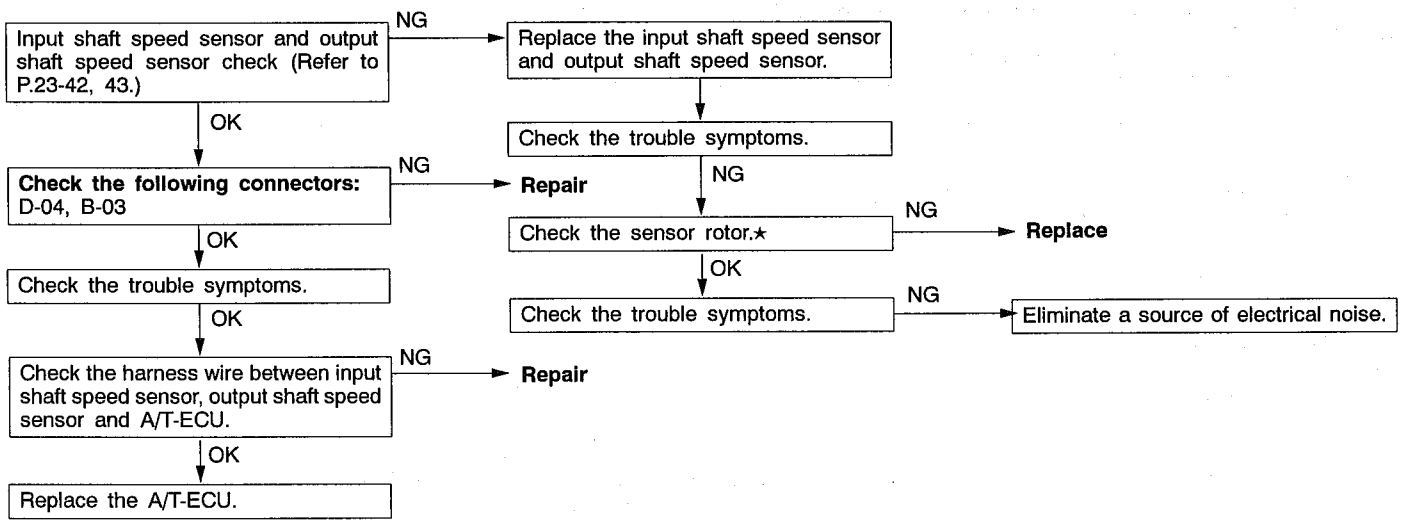

Code No. 38 Vehicle speed sensor system	Probable cause
If no output pulse is detected from the vehicle speed sensor for 120 seconds or more continuously while driving at a speed of 60 km/h or more, there is judged to be an open circuit in the vehicle speed sensor and diagnosis code No. 38 is output.	• Malfunction of the vehicle speed sensor • Malfunction of harness or connector • Malfunction of the A/T-ECU

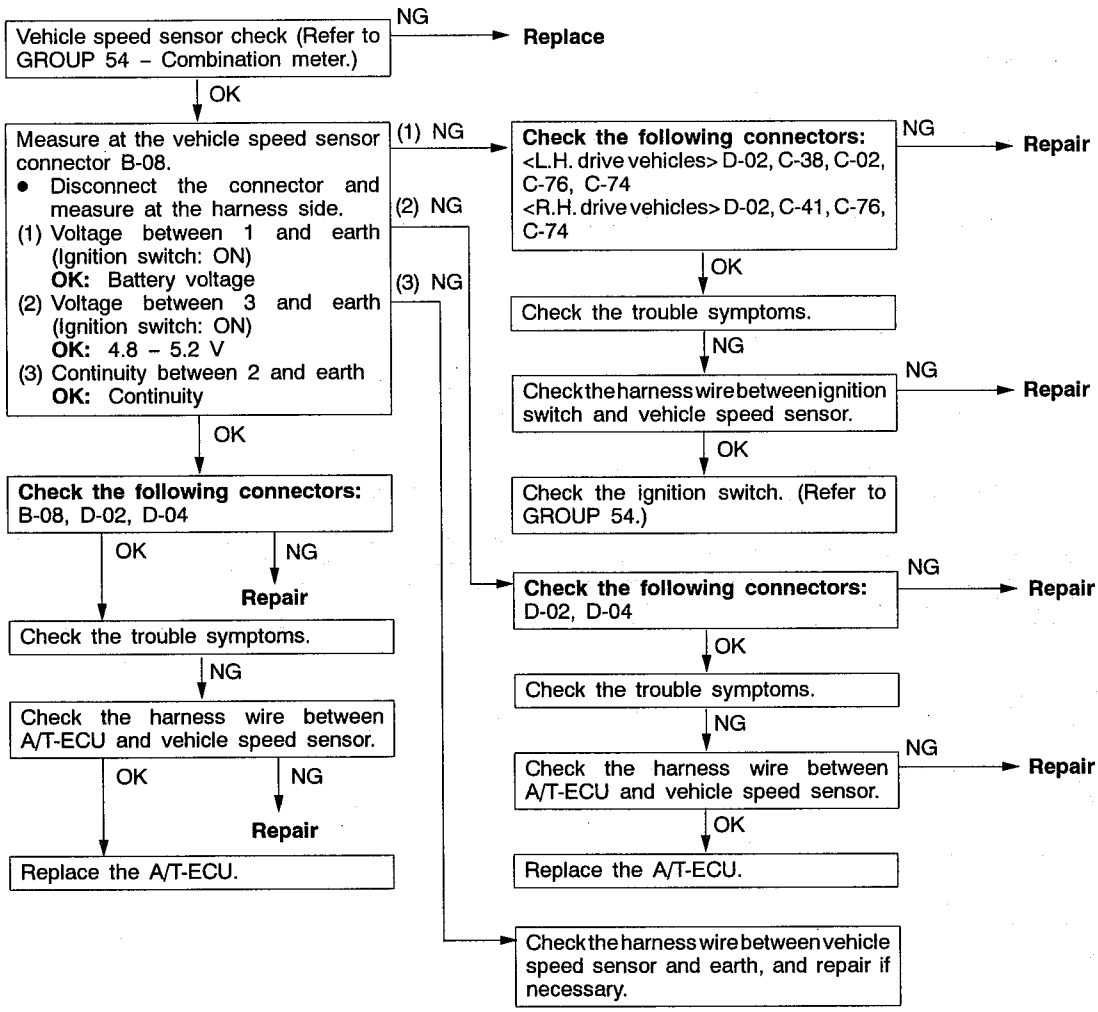

Code No. 41, 42 Solenoid valve No.1 system	Probable cause
If the resistance value for a solenoid valve No.1 is too large, it is judged that there is an open circuit in the solenoid valve No.1 and the diagnosis code No.41 is output. If the resistance value for a solenoid valve No.1 is too small, it is judged that there is a short-circuit in the solenoid valve No.1 and the diagnosis code No.42 is output.	• Malfunction of solenoid valve No.1 • Malfunction of harness or connector • Malfunction of the A/T-ECU

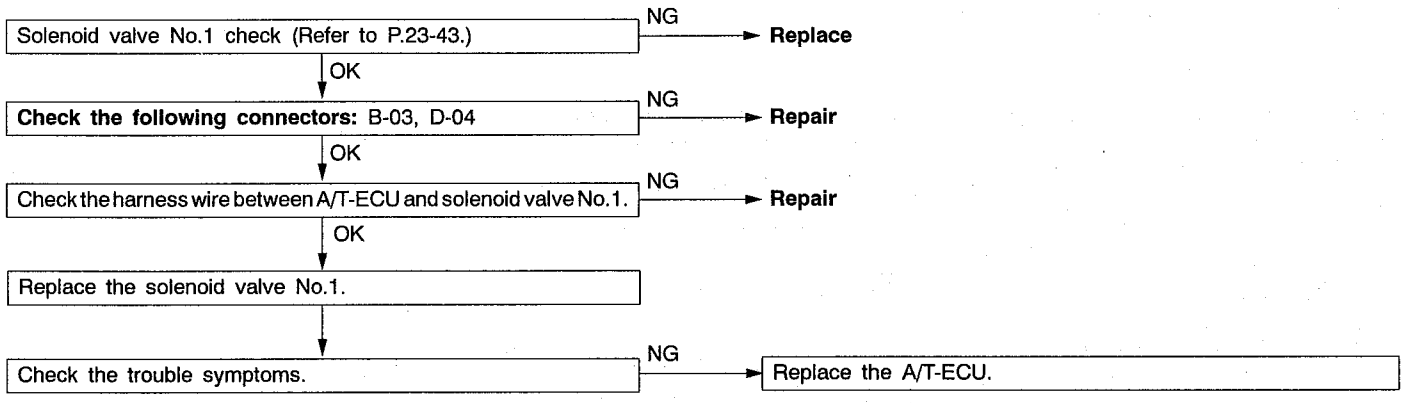

Code No. 43, 44 Solenoid valve No.2 system	Probable cause
If the resistance value for a solenoid valve No.2 is too large, it is judged that there is an open circuit in the solenoid valve No.2 and the diagnosis code No.43 is output. If the resistance value for a solenoid valve No.2 is too small, it is judged that there is a short-circuit in the solenoid valve No.2 and the diagnosis code No.44 is output.	• Malfunction of solenoid valve No.2 • Malfunction of harness or connector • Malfunction of the A/T-ECU

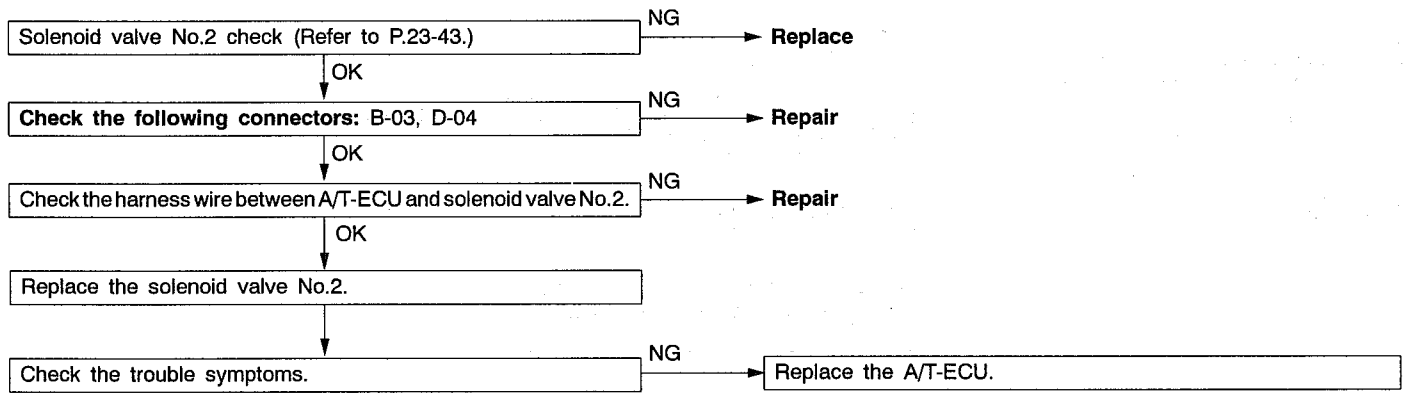

Code No. 47, 48 Solenoid valve No.3 system	Probable cause
If the resistance value for a solenoid valve No.3 is too large, it is judged that there is an open circuit in the solenoid valve No.3 and the diagnosis code No.47 is output. If the resistance value for a solenoid valve No.3 is too small, it is judged that there is a short-circuit in the solenoid valve No.3 and the diagnosis code No.48 is output.	• Malfunction of solenoid valve No.3 • Malfunction of harness or connector • Malfunction of the A/T-ECU

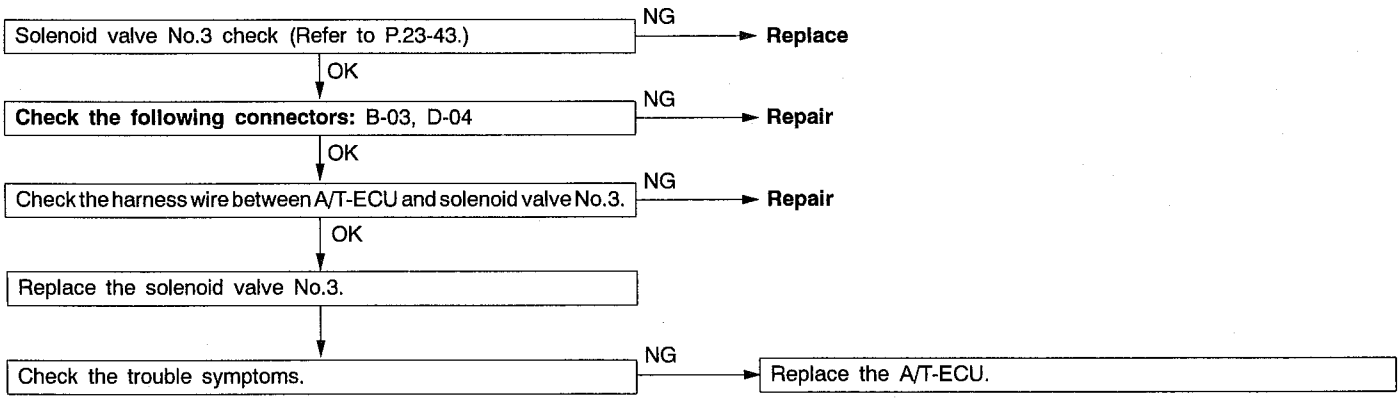

Code No. 55 Abnormal communication with engine-ECU	Probable cause
If normal communication is not possible for a continuous period of 1 second or more when the ignition switch is at the ON position and the battery voltage is 10 V or more, diagnosis code No. 55 is output. Diagnosis code No. 55 is also output if the data being received is abnormal for a continuous period of 1 second under the same conditions.	• Malfunction of harness or connector • Malfunction of the engine-ECU • Malfunction of the A/T-ECU

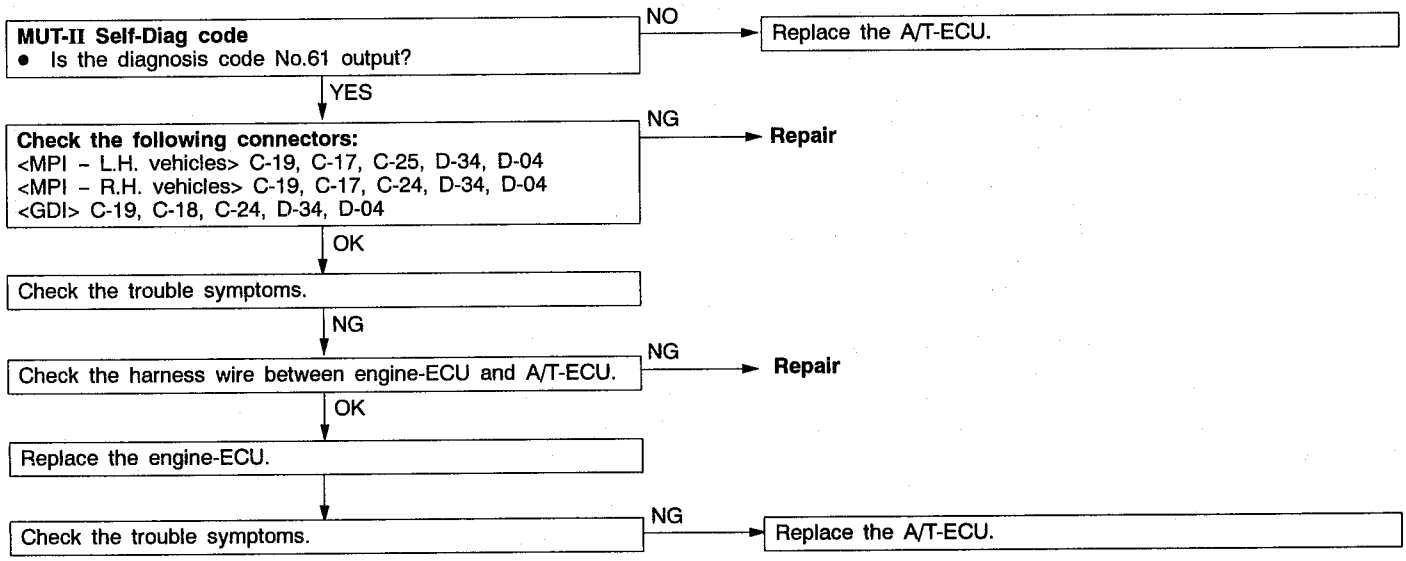

INSPECTION CHART FOR TROUBLE SYMPTOMS

Trouble symptom		Inspection procedure No.	Reference page
Communication with the MUT-II is not possible		1	23-17
Does not move	Does not move forward and reverse	2	23-18
	Does not move forward only	3	23-18
	Does not reverse only	4	23-19
Malfunction when shifting	Upshifting does not occur	5	23-19
	Downshifting does not occur	6	23-20
	Shifting point abnormality	7	23-20
	Upshifting occurs spontaneously	8	23-21
	Incorrect drive gear position	9	23-21
Large shocks		10	23-22
Slippage (vibration)		11	23-23
Lockup malfunction		12	23-24
Abnormal engine braking		13	23-24
Electronic circuit systems	Inhibitor switch system	14	23-25
	Overdrive switch system	15	23-25
	Stop lamp switch system	16	23-26

INSPECTION PROCEDURE FOR TROUBLE SYMPTOMS

INSPECTION PROCEDURE 1

Communication with the MUT-II is not possible	Probable cause
If communication with the MUT-II is not possible, the cause is probably a malfunction in the self-diagnosis system or the A/T-ECU is not functioning.	• Malfunction of self-diagnosis system • Malfunction of A/T-ECU power circuit • Malfunction of A/T-ECU earth circuit • Malfunction of A/T-ECU • Malfunction of harness and connector

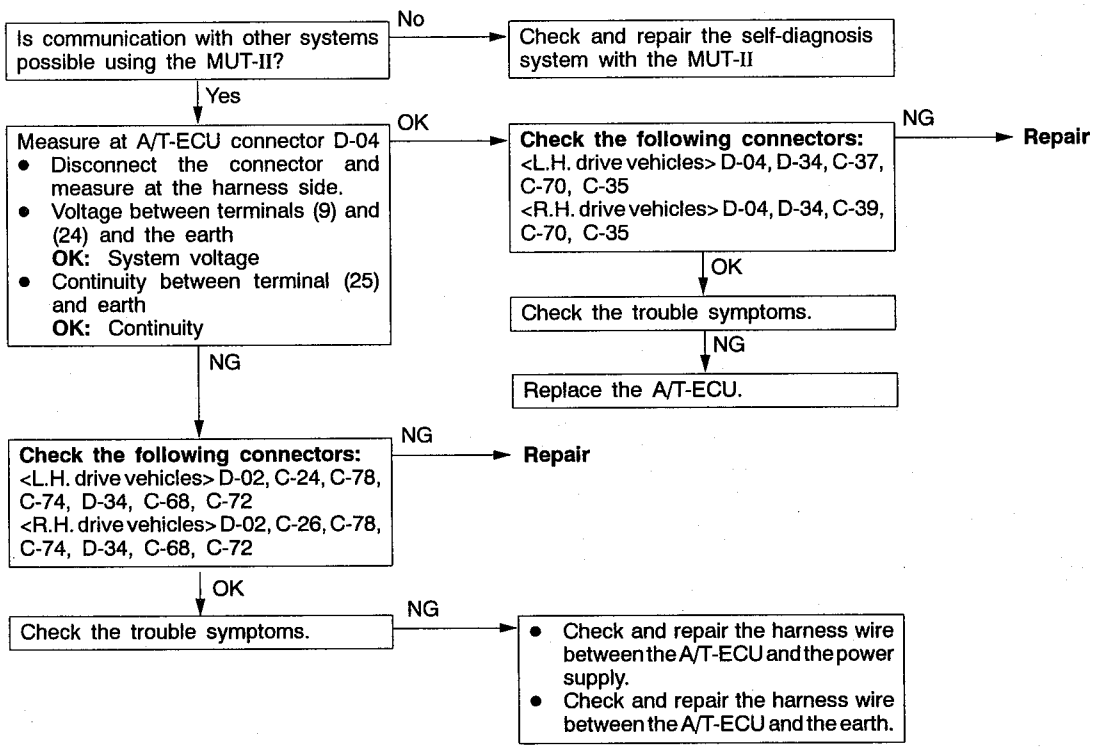

INSPECTION PROCEDURE 2

Does not move forward and reverse	Probable cause
When the engine is idling, the vehicle does not move forward and reverse even if the selector lever is shifted from N to D, 2, L or R positionj. In such cases, the cause is probably abnormal line pressure, or a malfunction of the transmission control cable, torque converter, oil pump, parking mechanism or the power train.	• Malfunction of transmission control cable • Abnormal line pressure • Malfunction of power train • Malfunction of oil pump • Malfunction of valve body • Malfunction of parking mechanism • Malfunction of torque converter

★: Refer to the Transmission Workshop Manual.

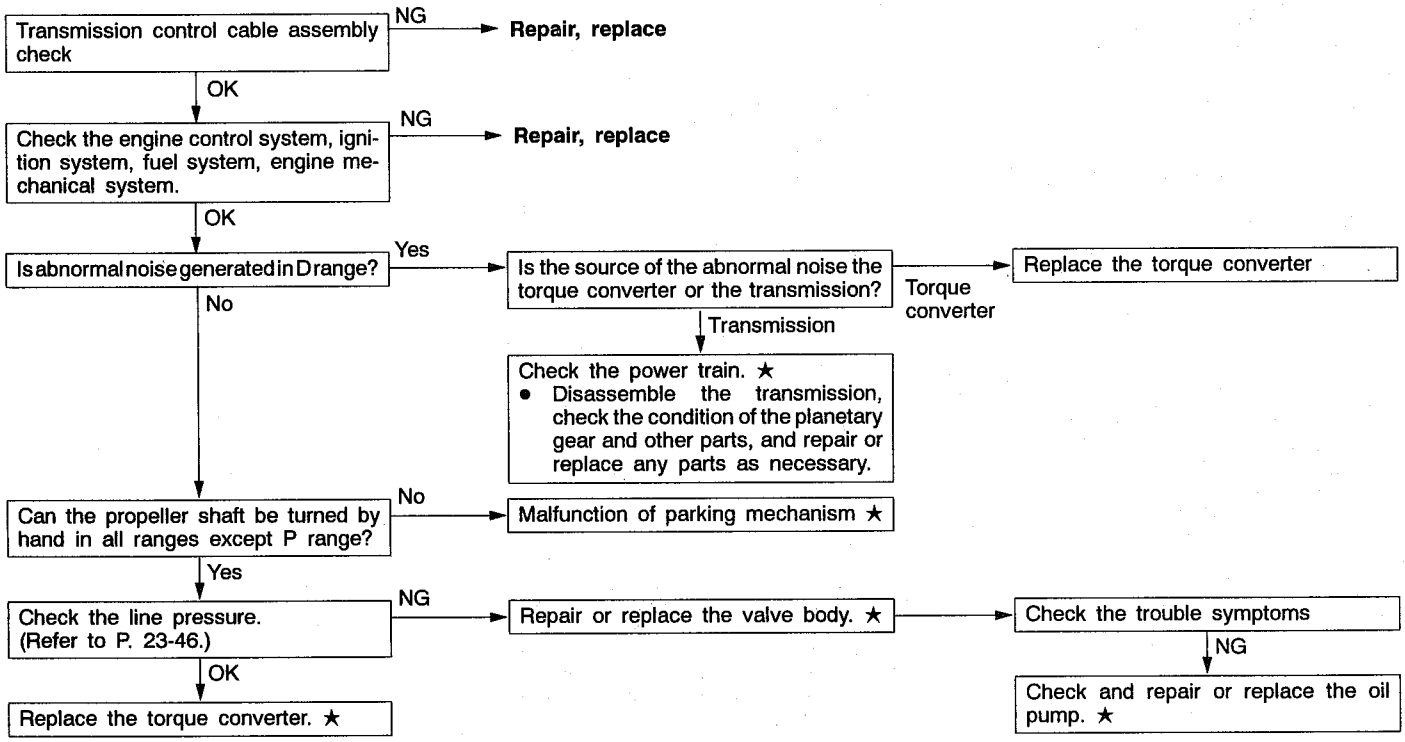

INSPECTION PROCEDURE 3

Does not move forward only	Probable cause
When the engine is idling, the vehicle does not move forward even if the selector lever is shifted from N to D, 2 or L range. In such cases, the cause is probably a malfunction of the clutch or brake.	• Malfunction of forward clutch • Malfunction of direct clutch • Malfunction of one-way clutch No. 2 • Malfunction of brake No. 1 • Malfunction of brake No. 2 • Malfunction of brake No. 3

★: Refer to the Transmission Workshop Manual.

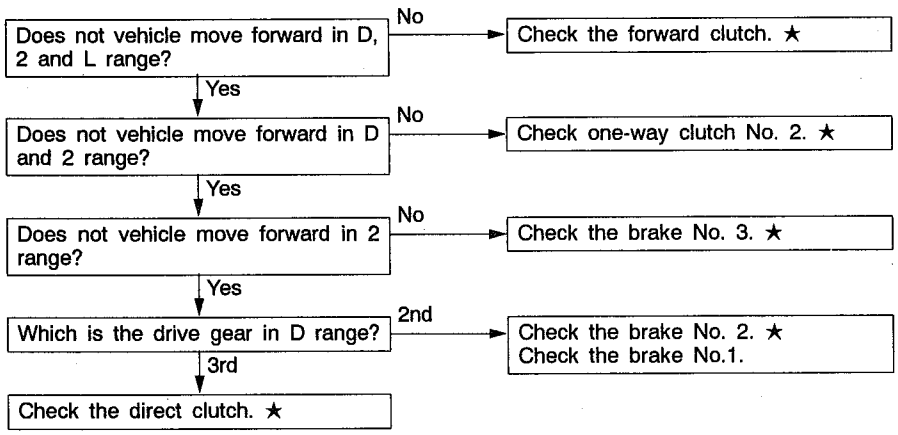

INSPECTION PROCEDURE 4

Does not reverse only	Probable cause
When the engine is idling, the vehicle does not reverse even if the selector lever is shifted from N to R range. In such cases, the cause is probably a malfunction of a clutch, brake or the valve body.	• Malfunction of brake No. 1 • Malfunction of direct clutch • Malfunction of brake No. 3 • Malfunction of valve body • Malfunction of planetary gear

★: Refer to Transmission Workshop Manual.

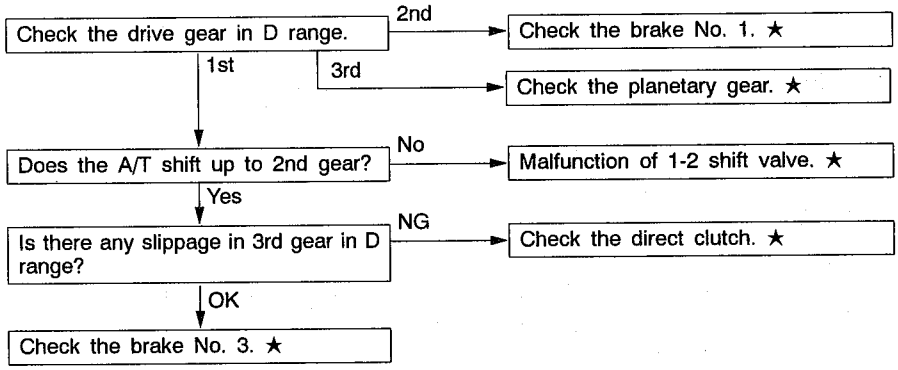

INSPECTION PROCEDURE 5

Upshifting does not occur	Probable cause
Upshifting does not occur under conditions when upshifting should occur. Check shifting from 1→2, 2→3 and 3→4 respectively.	• Malfunction of solenoid valve No. 1, No. 2 • Malfunction of A/T-ECU • Malfunction of power train internal parts

★: Refer to the Transmission Workshop Manual.

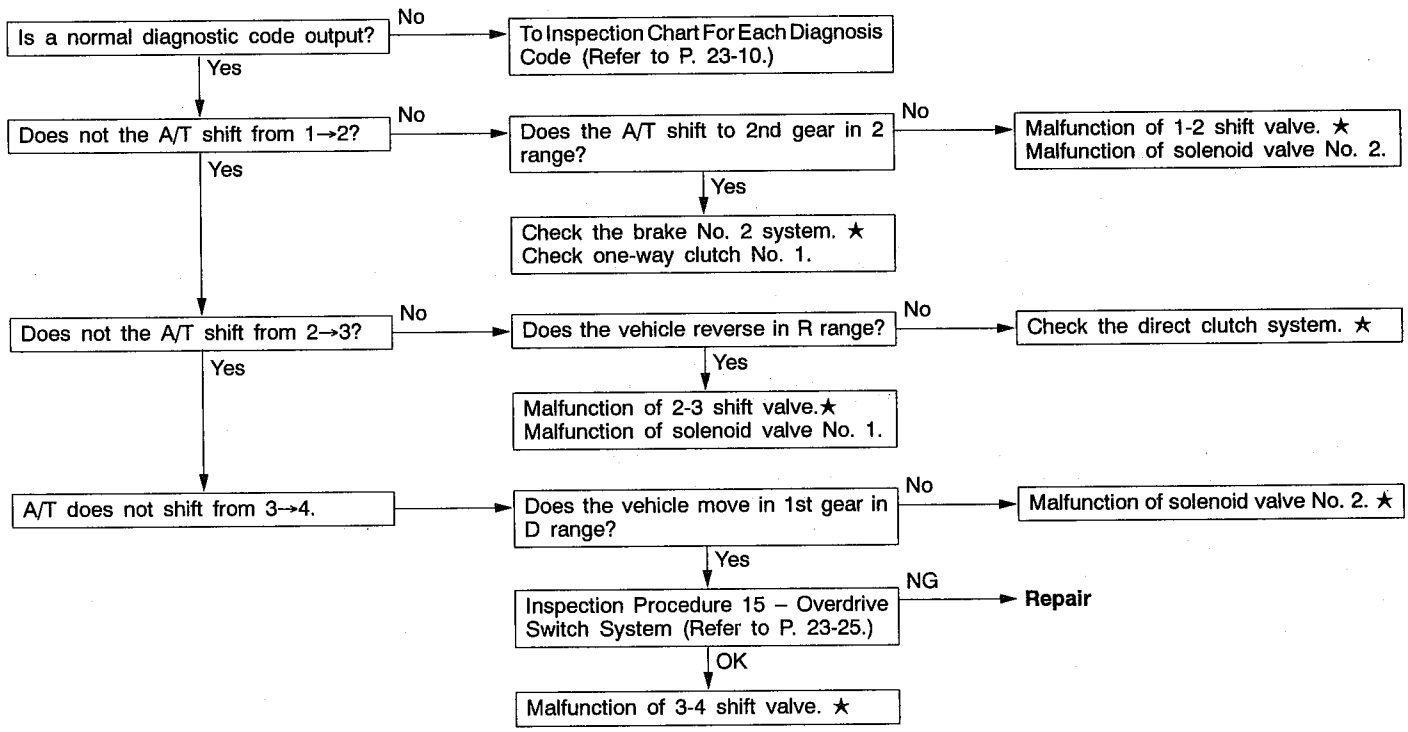

INSPECTION PROCEDURE 6

Downshifting does not occur	Probable cause
Downshifting does not occur under conditions when downshifting should occur. Check shifting from 2→1, 3→2 and 4→3 respectively.	• Malfunction of solenoid No. 1, No. 2 • Malfunction of A/T-ECU • Malfunction of power train internal parts

★: Refer to the Transmission Workshop Manual.

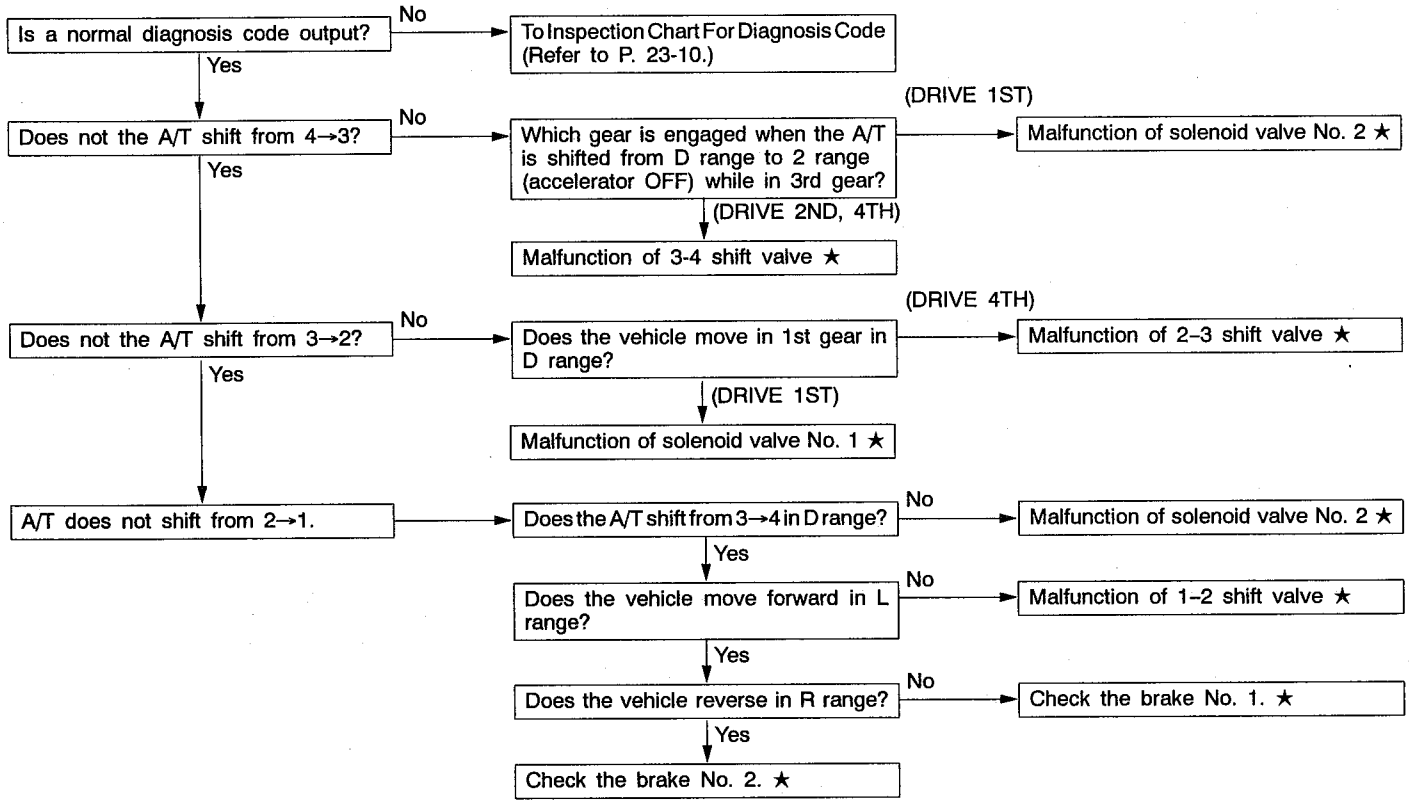

INSPECTION PROCEDURE 7

Shifting point abnormality	Probable cause
Shifting occurs at points which are different from the shift pattern. Note that the shift pattern will vary in different modes and at high A/T fluid temperatures.	• Malfunction of A/T fluid temperature sensor • Malfunction of A/T-ECU

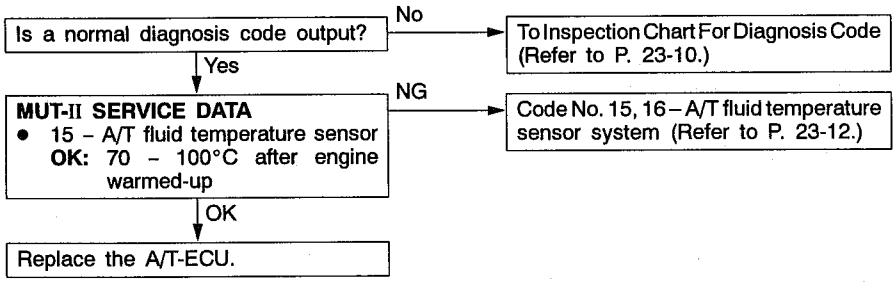

INSPECTION PROCEDURE 8

Upshifting occurs spontaneously	Probable cause
Upshifting occurs in ranges where upshifting should not occur, e. g. upshifting to 2nd gear in L range, 3rd gear in 2 range or 4th gear in D range when overdrive is disconnected.	• Malfunction of inhibitor switch • Malfunction of overdrive switch • Malfunction of A/T-ECU

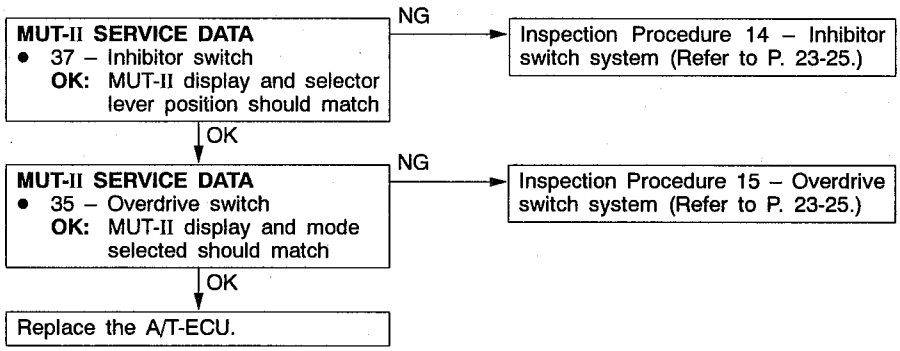

INSPECTION PROCEDURE 9

Incorrect drive gear position	Probable cause
Vehicle starts off in 2nd, 3rd or 4th gear when in D range. Often occurs when starting off is not smooth.	• Malfunction of inhibitor switch • Malfunction of direct clutch • Malfunction of planetary gear • Malfunction of valve body • Malfunction of forward clutch • Malfunction of solenoid valve No. 1

★: Refer to the Transmission Workshop Manual.

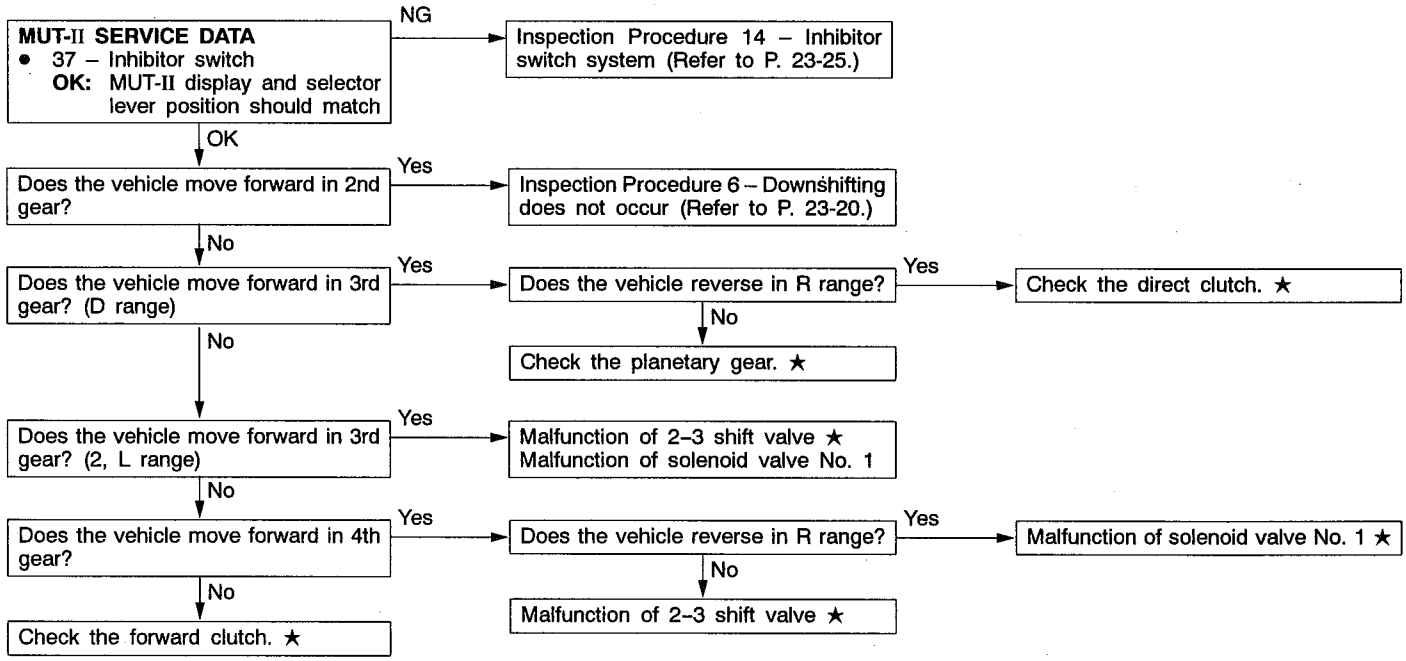

INSPECTION PROCEDURE 10

Large shocks	Probable cause
Shocks accompany shifting from N→D, N→R and during each upshift and downshift.	• Malfunction of direct clutch • Malfunction of brake No. 3 • Malfunction of stop lamp switch • Malfunction of inhibitor switch • Malfunction of forward clutch • Malfunction of valve body • Malfunction of A/T-ECU

★: Refer to the Transmission Workshop Manual.

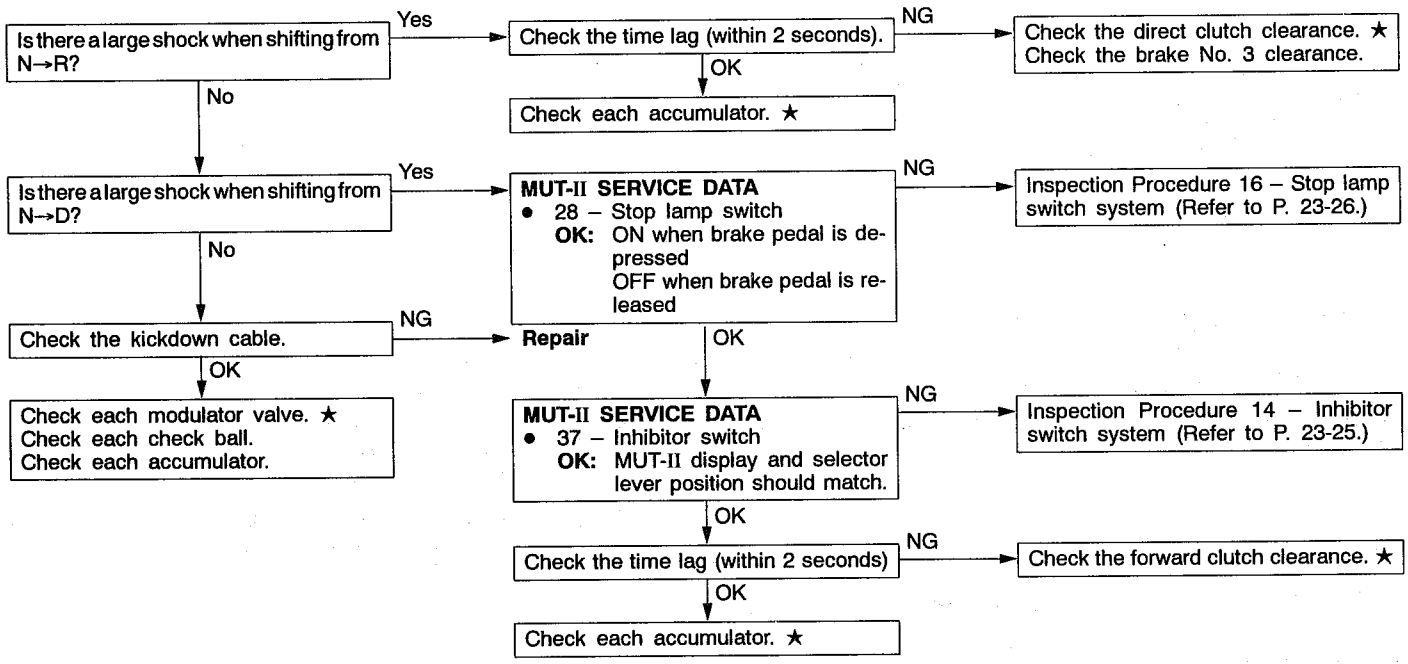

INSPECTION PROCEDURE 12

Lockup abnormality	Probable cause
When lockup does not operate even though in the lockup range, and also when lockup is operating and the engine is idling but then stalls.	• Malfunction of torque converter • Malfunction of valve body

★: Refer to the Transmission Workshop Manual.

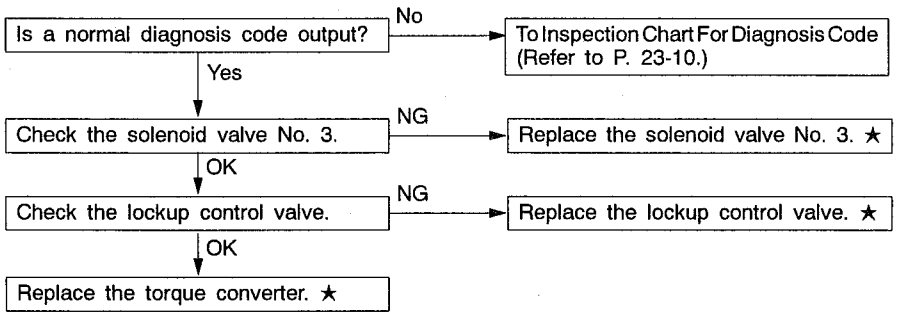

INSPECTION PROCEDURE 13

Abnormal engine braking	Probable cause
Engine braking effectiveness is poor after downshifting has occurred.	• Malfunction of overdrive clutch • Malfunction of brake No. 3 • Malfunction of brake No. 1 • Malfunction of valve body

★: Refer to the Transmission Workshop Manual.

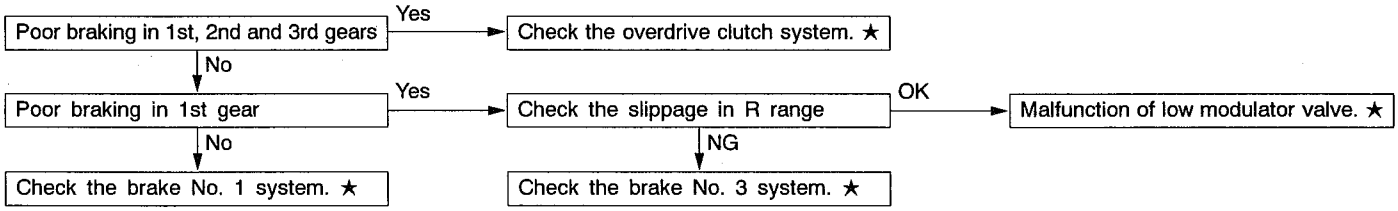

INSPT PRO	Probable cause
Sliagibrati Occ w clutch o ...lly engage due to low hydraulic pressure or ...orng. Appe when the problem is slight.	• Malfunction of torque converter • Malfunction of direct clutch • Malfunction of forward clutch • Malfunction of brake No. 2 • Malfunction of one-way clutch No. 1 • Malfunction of overdrive brake • Malfunction of brake No. 3 • Malfunction of one-way clutch No. 2 • Malfunction of brake No. 1 • Malfunction of overdrive one-way clutch

★: Re/to the ...ion Workshop Manual.

Does slige occur b... forwardd reversin... ng
- Yes → Check the torque converter. ★
  - NG → Replace the torque converter.
  - OK → Check the overdrive clutch system. ★ Check the overdrive one-way clutch clutch system. ★
- N ↓

Does slipage occu...ge?
- Yes → Check slippage in 3rd gear in D range.
  - NG → Check the direct clutch system. ★
  - OK → Check the brake No. 3 system. ★
- ↓

Does slippage occ...t gear?
- Yes → Check for slippage in L range.
  - NG → Check the forward clutch system. ★
  - OK → Check the one-way clutch No. 2 system. ★
- ↓

Does slippage occu...2nd gear?
- Yes → Check for slippage in 2nd gear in 2 range.
  - NG → Check the brake No. 2 system. ★
  - OK → Check the brake No. 2 system. ★ Check one-way clutch No. 1.
- N ↓

Does slippage occur 3rd gear?
- Yes → Check the direct clutch system. ★
- N ↓

Check the overdrive rake system. ★

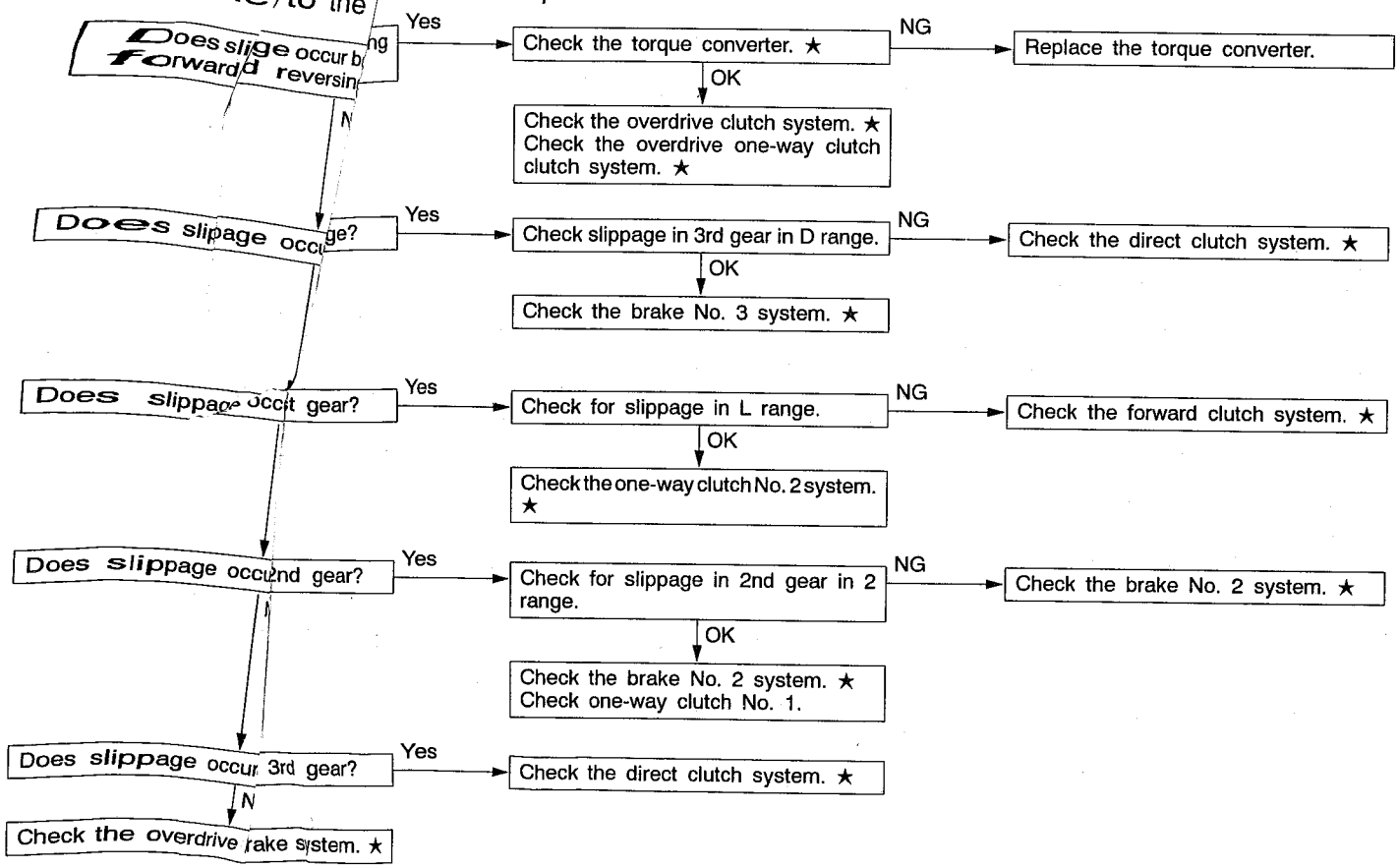

INSPECTION PROCEDURE 14

Inhibitor switch system	Probable cause
If the engine does not start in P or N range, the cause is probably a problem in the inhibitor switch system.	• Malfunction of inhibitor switch • Malfunction of harness or connector • Malfunction of A/T-ECU

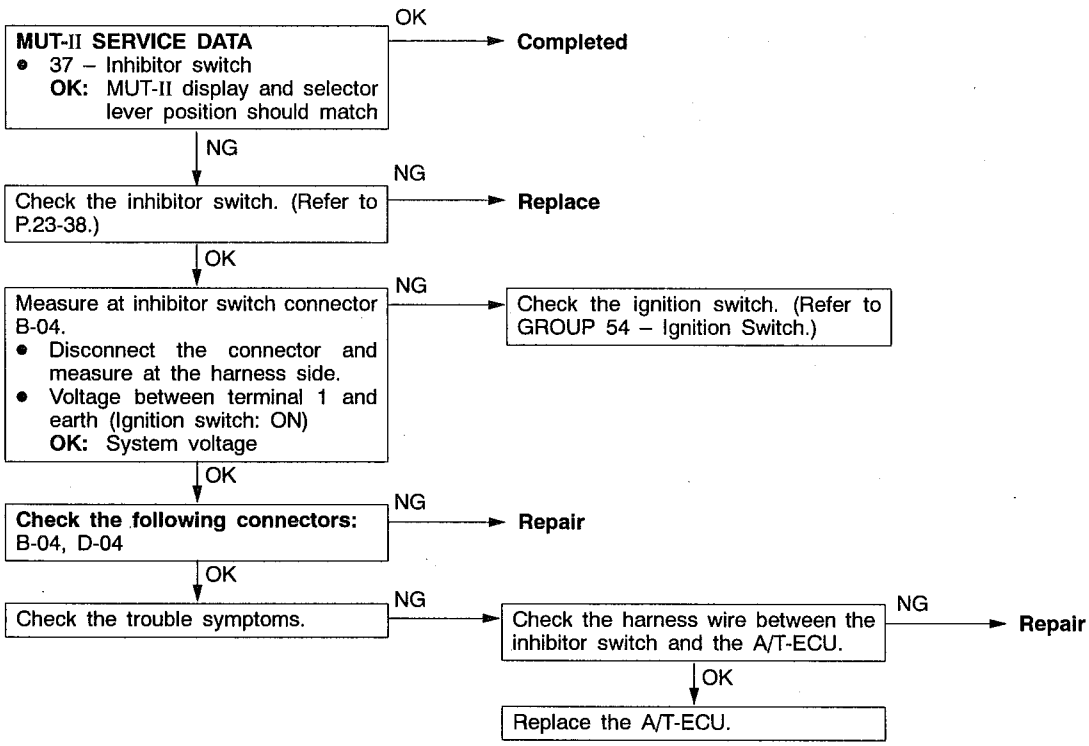

INSPECTION PROCEDURE 15

Overdrive switch system	Probable cause
If downshifting does not occur when overdrive switch is turned off while driving in 4th gear, or if shifting to 4th gear is not possible, the cause is probably a problem in the overdrive switch system.	• Malfunction of overdrive switch • Malfunction of harness or connector • Malfunction of A/T-ECU

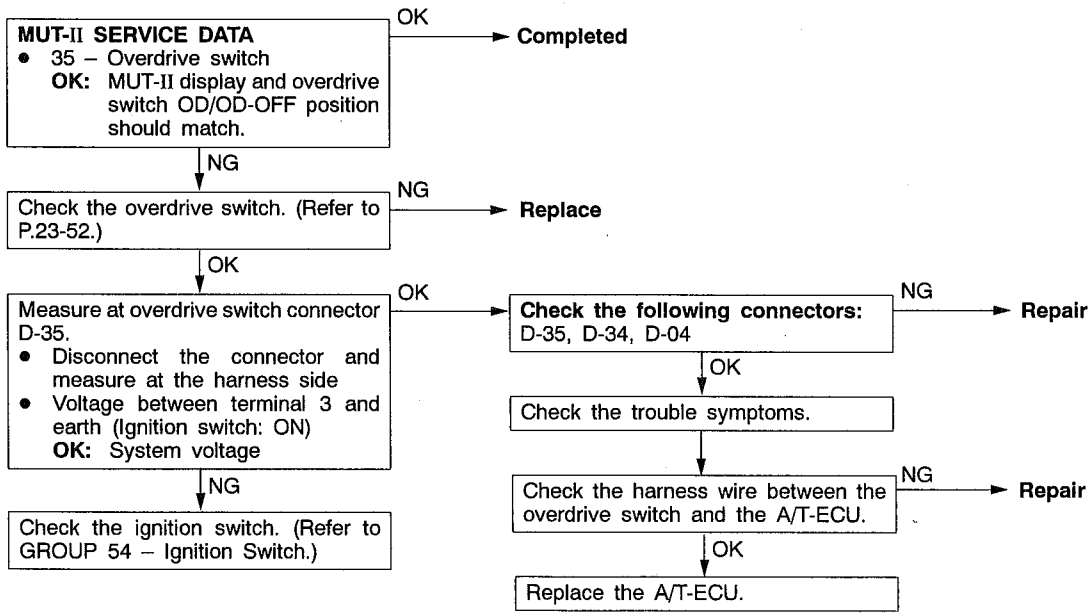

INSPECTION PROCEDURE 16

Stop lamp switch system	Probable cause
If large shocks occur during squat control, the cause is probably a problem with the stop lamp switch.	• Malfunction of stop lamp switch • Malfunction of harness or connector • Malfunction of A/T-ECU

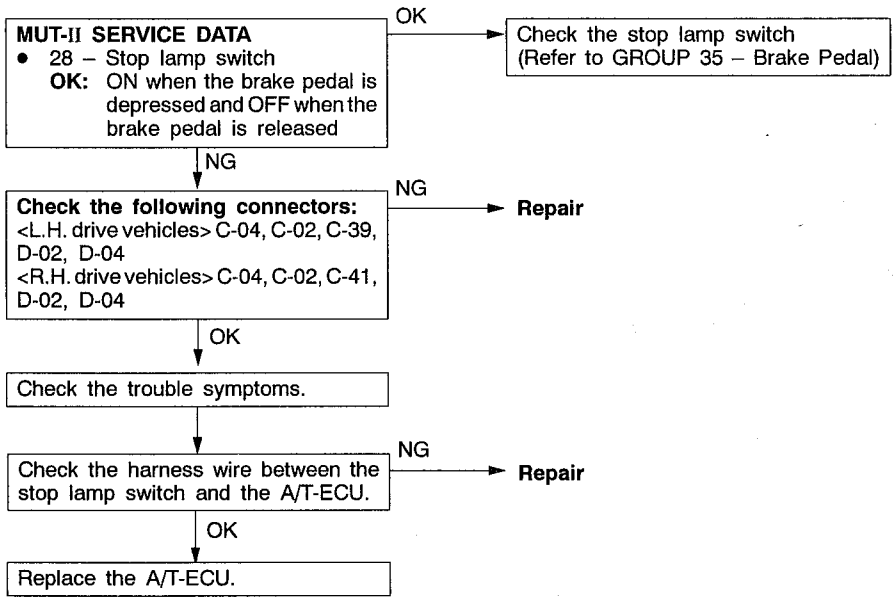

SERVICE DATA REFERENCE TABLE

Item No.	Inspection item	Inspection conditions		Normal value
12	Throttle position sensor <MPI> (power supply voltage)	Ignition switch: ON Engine: Stopped	Ignition switch: ON	Approx. 5 V
			Ignition switch: OFF	0 V
13	Throttle position sensor <MPI> Accelerator pedal position sensor <GDI> (throttle opening voltage)	Engine: Idle Selector lever position: N	Accelerator pedal: Fully released	0 – 5 %
			Accelerator pedal: Depressed	Gradually rises from the above value
			Accelerator pedal: Fully depressed (up to 2 seconds)	85 – 100 %
14	Accelerator pedal position sensor <GDI> (power supply voltage)	Ignition switch: ON Engine: Stopped	Ignition switch: ON	Approx. 5 V
			Ignition switch: OFF	0 V
15	A/T fluid temperature sensor	Driving with engine warmed up	Drive for 15 minutes or more until the A/T fluid temperature is 70 – 90°C.	Gradually increases to 70 – 90°C
27	Shift position signal	Accelerator pedal: Fully released Engine: Idle (Vehicle stopped) Selector lever position: N Brake pedal: Depressed	Shifting from N to D	1st→3rd→1st
		Selector lever position: L	Idle (Vehicle stopped)	1st
		Selector lever position: 2	Idle (Vehicle stopped)	1st
			Driving at 40 km/h (20 seconds or more)	2nd
		Selector lever position: D Overdrive switch: OFF	Driving at constant speed of 50 km/h (20 seconds or more)	3rd
		Selector lever position: D Overdrive switch: OFF	Driving at constant speed of 50 km/h (20 seconds or more)	4th
28	Stop lamp switch	Ignition switch: ON Engine: Stopped	Brake pedal: Depressed	ON
			Brake pedal: Released	OFF
31	Input shaft speed sensor	Selector lever position: D Overdrive switch: OFF	Driving at constant speed of 50 km/h	1,800 – 2,000 r/min
32	Output shaft speed sensor	Selector lever position: D Overdrive switch: OFF	Driving at constant speed of 50 km/h	1,800 – 2,000 r/min
35	Overdrive switch	Ignition switch: ON Engine: Stopped	Overdrive switch: OFF	OD-OFF
			Overdrive switch: ON	OD

Item No.	Inspection item	Inspection conditions		Normal value
37	Inhibitor switch	Ignition switch: ON Engine: Stopped	Selector lever position: P	P, R, D
			Selector lever position: R	P, R, D
			Selector lever position: N	N
			Selector lever position: D	P, R, D
			Selector lever position: 2	2
			Selector lever position: L	L
38	Vehicle speed sensor	Selector lever position: L, D Overdrive switch: OFF	Idling in 1st gear (Vehicle stopped)	0 r/min
			Driving at constant speed of 50 km/h (3rd gear)	450 – 550 r/min
41	Solenoid valve No. 1	Selector lever position: D Overdrive switch: ON	Driving at constant speed of 5 km/h (1st gear)	ON
			Driving at constant speed of 50 km/h (4th gear)	OFF
43	Solenoid valve No. 2	Selector lever position: D Overdrive switch: OFF	Driving at constant speed of 5 km/h (1st gear)	OFF
			Driving at constant speed of 50 km/h (3rd gear)	ON
47	Solenoid valve No. 3	Selector lever position: D Overdrive switch: ON	Driving at constant speed of 5 km/h (1st gear)	OFF
			Driving at constant speed of 50 km/h (4th gear)	ON
53	N range switch	Ignition switch: ON Engine: Stopped	Selector lever position: N	ON
			Selector lever position: Other than N	OFF
55	2 range switch		Selector lever position: 2	ON
			Selector lever position: Other than 2	OFF
56	L range switch		Selector lever position: L	ON
			Selector lever position: Other than L	OFF
61	Free-wheeling engage switch	Ignition switch: ON Engine: Stopped	Transfer lever position: Other than 4WD	4WD
			Transfer lever position: 4WD	2WD
63	Dual-pressure switch	Engine: Stopped Selector lever position: N	A/C switch: ON	ON
			A/C switch: OFF	OFF

REFERENCE FOR FAIL-SAFE/BACKUP FUNCTIONS

When malfunctions of the main sensors or actuators are detected by the diagnosis system, the vehicle is controlled by means of the pre-set control logic to maintain safe conditions for driving.

Malfunctioning item	Control contents during malfunction
Output shaft speed sensor	If there is an open circuit in the output shaft speed sensor, upshifting to 4th gear and lockup control is stopped.
Inhibitor switch	If there is an open circuit in the N, 2 or L signal line, driving is possible in the case of 2 and L (same as D range) so that control can be performed as if the range is D range, and driving is not possible in N range. If more than one of the N, 2 or L signals are input, the order of priority for control is L→2→N.
Throttle position sensor Accelerator pedal position sensor	If the output is 0.335 V or less or 4.8 V or more during idling condition, gear shifting control when throttle is fully closed is carried out.
Solenoid valve No. 3	If a problem is detected, lockup is stopped over the whole range and the solenoid is turned off to prevent the engine from stalling during idling.
Solenoid valve No. 1, No. 2	If a problem is detected, each solenoid stops operating and is turned off. The gear shifting logic when a problem is detected is given in the table below

Selector lever position	Normal			When the solenoid valve No. 1 has broken			When the solenoid valve No. 2 has broken			When the solenoid valves No. 1 and No. 2 have broken		
	Gear	S1	S2	Gear	S1	S2	Gear	S1	S2	Gear	S1	S2
D	1	○	×	3		×→○	1	○		O/D		
	2	○	○	3		○	O/D	○→×		O/D		
	3	×	○	3		○	O/D	×		O/D		
	O/D	×	×	O/D		×	O/D	×		O/D		
2	1	○	×	3		×→○	1	○		3		
	2	○	○	3		○	3	○→×		3		
	3	×	○	3		○	3	×		3		
L	1	○	×	1		×	1	○		1		
	2	○	○	2		○	1	○		1		

○ : Energized (ON)
× : Not energized (OFF)

A/T-ECU TERMINAL VOLTAGE REFERENCE CHART

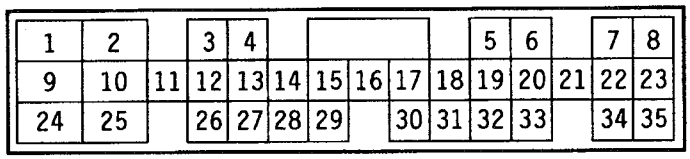

W0181AG

Terminal No.	Inspection item	Inspection conditions	Standard value
1	Solenoid valve No. 1	When in 1st or 2nd gear	System voltage
		When in 3rd or 4th gear	0 V
2	Solenoid valve No. 2	When in 2nd or 3rd gear	System voltage
		When in 1st or 4th gear	0 V
4	Output shaft speed sensor earth	–	–
5	Stop lamp switch	Brake pedal: Depressed	System voltage
		Brake pedal: Released	0 V
6	Free-wheeling engage switch	Transfer lever position: Other than 4WD	System voltage
		Transfer lever position: 4WD	0 V
8	Inhibitor switch (L)	Selector lever position: L	System voltage
		Selector lever position: Other than L	0 V
9	Back-up power supply	Ignition switch: OFF	System voltage
10	Solenoid valve No. 3	When lockup clutch is operating	System voltage
		When lockup clutch is not operating	0 V
11	Diagnosis control terminal	–	–
12	A/T fluid temperature sensor earth	–	–
13	Output shaft speed sensor	Vehicle: Stopped	Approx. 2.5 V
		Vehicle: Driving	Other than 2.5 V
14	Dual-pressure switch	A/C switch: OFF	0 V
		A/C switch: ON	System voltage
15	Input shaft speed sensor earth	–	–
16	Input shaft speed sensor	Ignition switch: OFF	0 V
		Ignition switch: ON	2.5 V
19	Communication with input signals from engine-ECU	Engine: Idling Selector lever position: D	Other than 0 V

Terminal No.	Inspection item	Inspection conditions	Standard value
21	Communication with output signals to engine-ECU	Engine: Idling Selector lever position: D	Other than 0 V
23	Inhibitor switch (2)	Selector lever position: 2	System voltage
		Selector lever position: Other than 2	0 V
24	Power supply	Ignition switch: OFF	0 V
		Ignition switch: ON	System voltage
25	Earth	Engine: Idling	0 V
27	Vehicle speed sensor	Vehicle: Slowly moving forward	Alternates between 0↔Approx. 5 V
28	A/T fluid temperature sensor	ATF temperature: 120°C	Approx. 0.3 V
		ATF temperature: 150°C	Approx. 0.15 V
29	Overdrive switch	Overdrive switch: ON	System voltage
		Overdrive switch: OFF	0 V
30	Throttle position sensor <MPI> Accelerator pedal position sensor <GDI> (throttle opening voltage)	Accelerator pedal: Released	Approx. 1 V
		Accelerator pedal: Fully depressed	Approx. 4 V
31	Throttle position sensor <MPI> Accelerator pedal position sensor <GDI> (power supply voltage)	Ignition switch: ON	Approx. 5 V
		Ignition switch: OFF	0 V
32	Diagnostic output terminal	–	–
33	N range lamp	Ignition switch: ON	System voltage
		Ignition switch: OFF	0 V
34	Inhibitor switch (N)	Selector lever position: N	System voltage
		Selector lever position: Other than N	0 V

TROUBLESHOOTING <A/T KEY INTERLOCK AND SHIFT LOCK MECHANISMS>

DIAGNOSIS FUNCTION

INPUT SIGNAL INSPECTION PROCEDURE

Connect the MUT-II or a voltmeter to the diagnosis connector to check the inhibitor switch (reverse) input signal. (Refer to GROUP 00 – How to Use Troubleshooting/Inspection Service Points.)

NOTE
If all the input signals cannot be check by using the MUT-II, the diagnosis circuit may be defective.

INSPECTION CHART FOR TROUBLE SYMPTOMS

Problem	Inspection Procedure No.	Reference page
Selector lever can be moved from P to R without depressing brake pedal when ignition key is at positions other than LOCK (OFF).	1	23-32
Selector lever cannot be moved from P to R with brake pedal depressed when ignition key is at positions other than LOCK (OFF).	2	23-32
Selector lever can be moved from P to R with brake pedal depressed when ignition key is at LOCK (OFF) position.	3	23-33
Selector lever cannot be moved from P to R smoothly.	4	23-33
Selector lever cannot be moved from R to P.	5	23-33
Ignition key cannot be turned to LOCK (OFF) position when selector lever is at P position.	6	23-33
Ignition key can be turned to LOCK (OFF) position when selector lever is at positions other than P.	7	23-33
Buzzer does not sound when selector lever is moved to R position.	8	23-34

INSPECTION CHART FOR TROUBLE SYMPTOMS

INSPECTION PROCEDURE 1

Selector lever can be moved from P to R without depressing brake pedal when ignition key is at positions other than LOCK (OFF).	**Probable cause**
Lock cam or shift lock cable may be defective.	• Malfunction of lock cam • Malfunction of shift lock cable

Check items described in the column "Probable cause".

INSPECTION PROCEDURE 2

Selector lever cannot be moved from P to R with brake pedal depressed when ignition key is at positions other than LOCK (OFF).	**Probable cause**
Selector lever assembly, shift lock cable, key interlock cable, transmission control cable or lock cam may be defective.	• Malfunction of selector lever assembly • Malfunction of shift lock cable • Malfunction of key interlock cable • Malfunction of transmission control cable • Malfunction of lock cam

Check items described in the column "Probable cause".

INSPECTION PROCEDURE 3

Selector lever can be moved from P to R with brake pedal depressed when ignition key is at LOCK (OFF) position.	Probable cause
Lock cam or key interlock cable may be defective.	• Malfunction of lock cam • Malfunction of key interlock cable

Check items described in the column "Probable cause".

INSPECTION PROCEDURE 4

Selector lever cannot be moved from P to R smoothly.	Probable cause
Key interlock cable, shift lock cable, lock cam, or selector lever assembly may be defective.	• Malfunction of key interlock cable • Malfunction of shift lock cable • Malfunction of lock cam • Malfunction of selector lever assembly

Check items described in the column "Probable cause".

INSPECTION PROCEDURE 5

Selector lever cannot be moved from R to P.	Probable cause
Selector lever assembly or transmission control cable may be defective.	• Malfunction of selector lever assembly • Malfunction of transmission control cable

Check items described in the column "Probable cause".

INSPECTION PROCEDURE 6

Ignition key cannot be turned to LOCK (OFF) position when selector lever is at P position.	Probable cause
Lock cam, key interlock cable or key cylinder slider may be defective.	• Malfunction of lock cam • Malfunction of key interlock cable • Malfunction of key cylinder slider

Check items described in the column "Probable cause".

INSPECTION PROCEDURE 7

Ignition key can be turned to LOCK (OFF) position when selector lever is at positions other than P.	Probable cause
Lock cam, key cylinder cover or key interlock cable may be defective.	• Malfunction of lock cam • Malfunction of key cylinder cover • Malfunction of key interlock cable

Check items described in the column "Probable cause".

INSPECTION PROCEDURE 8

Buzzer does not sound when selector lever is moved to R position.	Probable cause
ECU power supply circuit, ECU earth circuit, power supply from inhibitor switch to ECU or ECU may be defective.	• Malfunction of harness or connector • Malfunction of ETACS-ECU

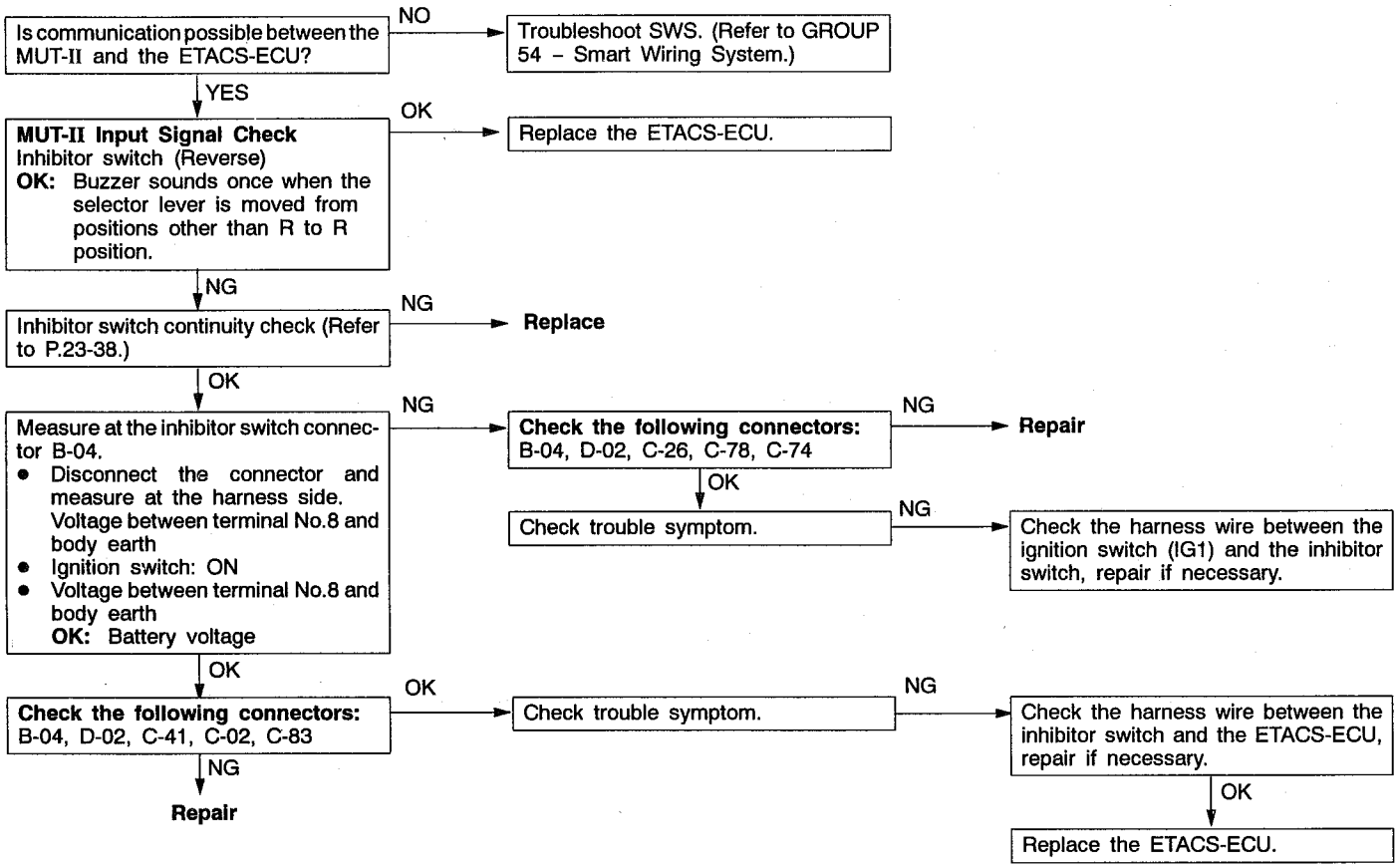

ON-VEHICLE SERVICE

ESSENTIAL SERVICE

AUTOMATIC TRANSMISSION FLUID CHECK

Caution
When the transmission has been replaced or overhauled, or driving has been carried out under the severe condition, the A/T fluid cooler line flushing should always be carried out and also, the A/T fluid should always be replaced.

1. Drive the vehicle until the A/T fluid temperature rises to the normal temperature (70 – 90°C).
2. Park the vehicle on a level surface.
3. Move the selector lever through all positions to fill the torque converter and the hydraulic circuits with A/T fluid, and then move the selector lever to the N position.
4. After wiping off any dirt around the oil level gauge, remove the oil level gauge and check the condition of the A/T fluid.

   NOTE
   If the A/T fluid smells as if it is burning, it means that the A/T fluid has been contaminated by the particles from the bushes and friction materials, a transmission overhaul and flushing the A/T fluid cooler line may be necessary.

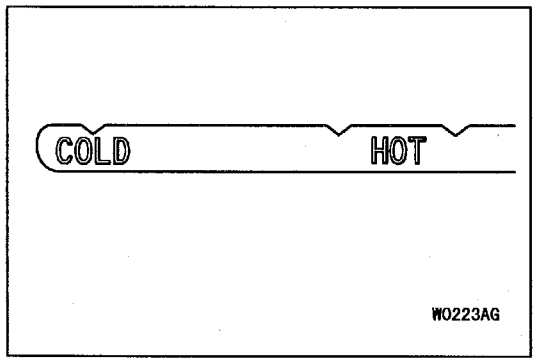

5. Check that the A/T fluid level is at the HOT mark on the oil level gauge. If the A/T fluid level is lower than this, pour in more A/T fluid until the level reaches the HOT mark.

   Automatic transmission fluid:
   Dexron II or equivalent

   NOTE
   If the A/T fluid level is low, the oil pump will draw in air along with the A/T fluid, which will cause bubbles to form inside the hydraulic circuit. This will in turn cause the hydraulic pressure to drop, which will result in late shifting and slipping of the clutches and brakes.
   If there is too much A/T fluid, the gears can churn it up into foam and cause the same conditions that can occur with low A/T fluid levels.
   In either case, air bubbles can cause overheating and oxidation of the A/T fluid which can interfere with normal valve, clutch, and brake operation. Foaming can also result in A/T fluid escaping from the transmission vent hole, in which case it may be mistaken for a leak.

6. Securely insert the oil level gauge.

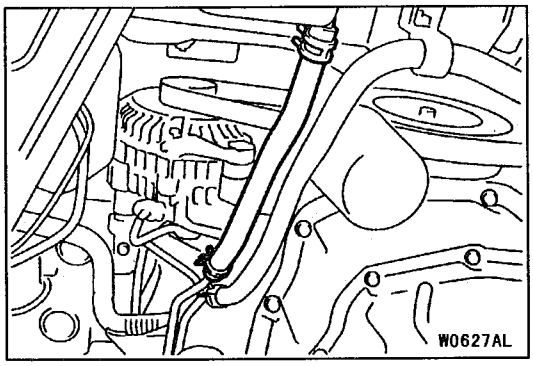

AUTOMATIC TRANSMISSION FLUID REPLACEMENT

Caution
When the transmission has been replaced or overhauled, the A/T fluid cooler line flushing should always be carried out before installing the A/T fluid cooler hose.

If you have a A/T fluid changer, use this changer to replace the A/T fluid. If you do not have a A/T fluid changer, replace the A/T fluid by the following procedure.

1. Disconnect the hose shown in the illustration which connects the transmission and the A/T fluid cooler (inside the radiator).
2. Start the engine and let the A/T fluid drain out.

   Running conditions: N range with engine idling

   Caution
   The engine should be stopped within one minute after it is started. If the A/T fluid has all drained out before then, the engine should be stopped at that point.

   Discharge volume: Approx. 3.4 ℓ

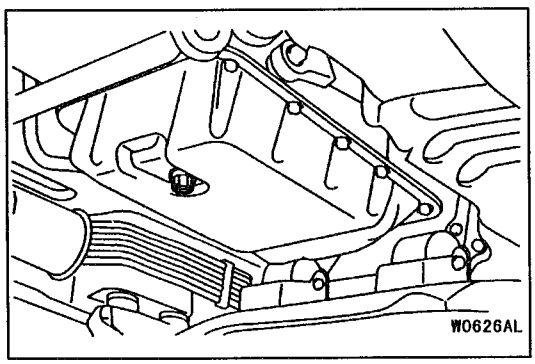

3. Remove the drain plug from the bottom of the transmission case to drain the A/T fluid.

   Discharge volume: Approx. 0.8 ℓ
4. Install the drain plug via a new gasket, and tighten it to the specified torque.

   Tightening torque: 20.1 Nm
5. Pour the new A/T fluid in through the oil filler tube.

   Adding volume: Approx. 4.2 ℓ

   Caution
   Stop pouring if the full volume of A/T fluid cannot be poured in.
6. Repeat the procedure in step 2.

   NOTE
   Drain the A/T fluid from the cooler hose 6.0 ℓ at least in steps 2 and 5. Then drain the A/T fluid a little and check the A/T fluid for dirt.
   If it has been contaminated, repeat the steps 5 and 6.
7. Pour the new A/T fluid in through the oil filler tube.

   Adding volume: Approx. 3.4 ℓ

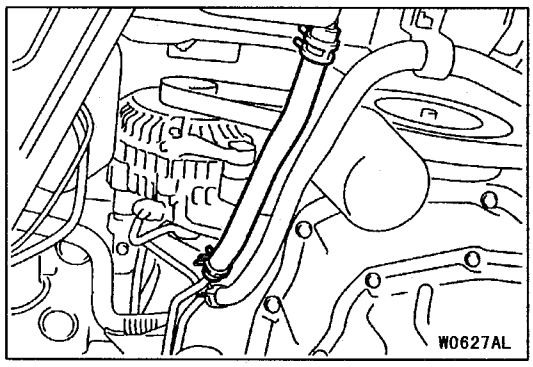

8. Reconnect the hose which was disconnected in step 1 above, and firmly replace the oil level gauge.
9. Start the engine and run it at idle for 1 – 2 minutes.
10. Move the selector lever through all positions, and then move it to the N position.

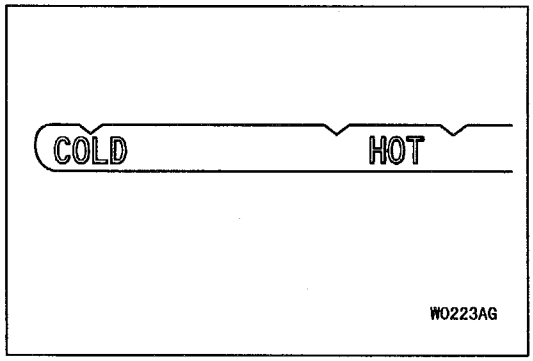

11. Check that the A/T fluid level is at the COLD mark on the oil level gauge. If the level is lower than this, pour in more A/T fluid.
12. Drive the vehicle until the A/T fluid temperature rises to the normal temperature (70 – 80°C), and then check the A/T fluid level again.
    The A/T fluid level must be at the HOT mark.

    NOTE
    The COLD level is for reference only; the HOT level should be regarded as the standard level.
13. Firmly insert the oil level gauge into the oil filler tube.

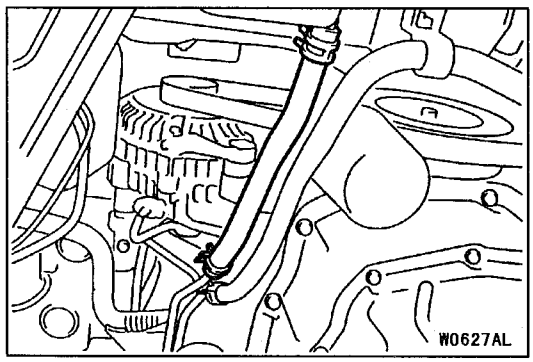

AUTOMATIC TRANSMISSION FLUID COOLER LINE FLUSHING

Caution
When the transmission has been replaced or overhauled, or A/T fluid is contaminated, the A/T fluid cooler line flushing should always be carried out.

1. Disconnect the hose shown in the illustration which connects the transmission and the A/T fluid cooler (inside the radiator).
2. Start the engine and let the A/T fluid drain out.

   Running conditions: N range with engine idling

   Caution
   The engine should be stopped within one minute after it is started. If the A/T fluid has all drained out before then, the engine should be stopped at that point.

   Discharge volume: Approx. 3.4 ℓ
3. Pour the new A/T fluid in through the oil filler tube.

   Adding volume: Approx. 3.4 ℓ

   Caution
   Stop pouring if the full volume of A/T fluid cannot be poured in.
4. Repeat the procedure in step 2.

   NOTE
   Drain the A/T fluid from the cooler hose 6.0 ℓ at least in step 2. Then drain the A/T fluid a little and check the A/T fluid for dirt.
   If it has been contaminated, repeat the steps 3 and 4.
5. Follow the automatic transmission fluid replacement procedure from the step 3.

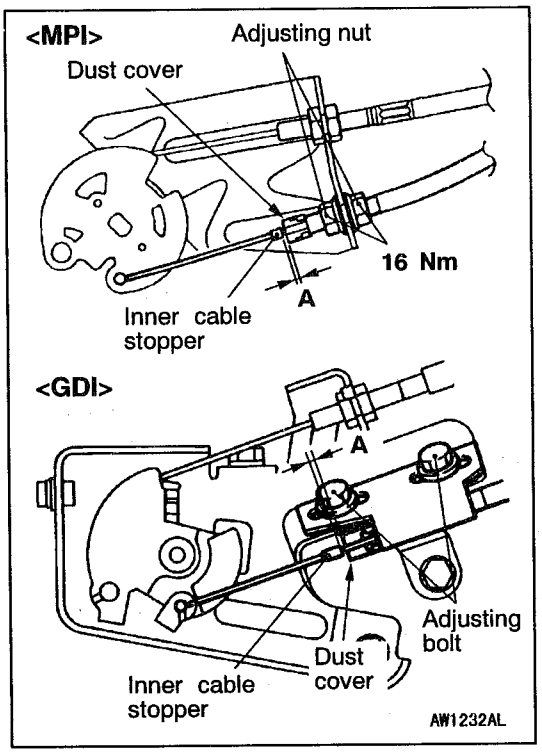

KICKDOWN CABLE CHECK AND ADJUSTMENT

1. Release the accelerator pedal.
2. Loosen the adjusting nut or adjusting bolt. Move the outer cable of the kickdown cable to adjust the clearance (A) between the inner cable stopper and dust cover end to the standard value, and then tighten the adjusting nut or adjusting bolt to secure the kickdown cable.

   Standard value: 0.8 – 1.5 mm

   Caution
   Adjust the accelerator cable assembly after the kickdown cable adjustment.

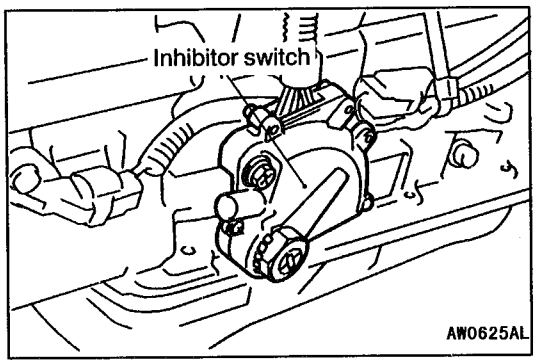

INHIBITOR SWITCH CONTINUITY CHECK

Position	Terminal No.									
	1	2	3	4	5	6	7	8	9	10
P	○			○		○		○		
R							○	○		
N	○			○	○			○		
D		○						○		
2								○		○
L			○					○		

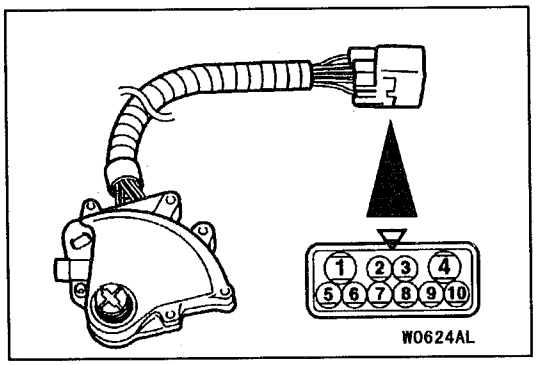

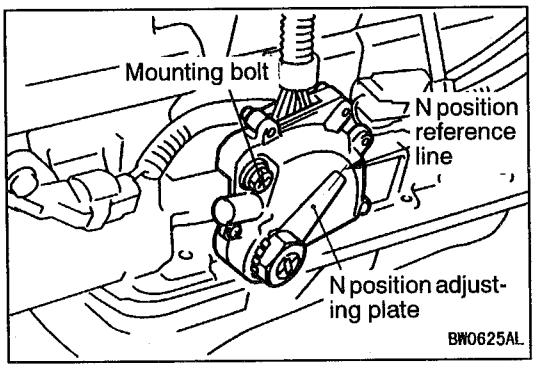

INHIBITOR SWITCH AND CONTROL CABLE ADJUSTMENT

1. Set the manual control lever to the N position.
2. Loosen the inhibitor switch mounting bolt.
3. Turn the inhibitor switch to align the N position reference line on the inhibitor switch with the scratched line on the N position adjusting plate.
4. Tighten the mounting bolt to the specified torque.

   Tightening torque: 5.4 Nm

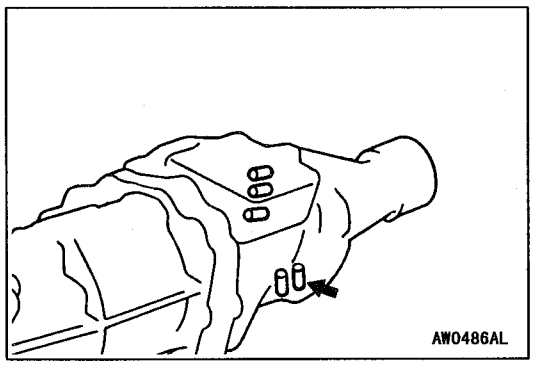

VCU LOCK DETECTION SWITCH CONTINUITY CHECK

Check the continuity between the terminal of the brown connector installed in the side of transfer case (shown in the illustration) and the transfer case.

Transfer lever position	Continuity
4H	No continuity
4HLc	Continuity

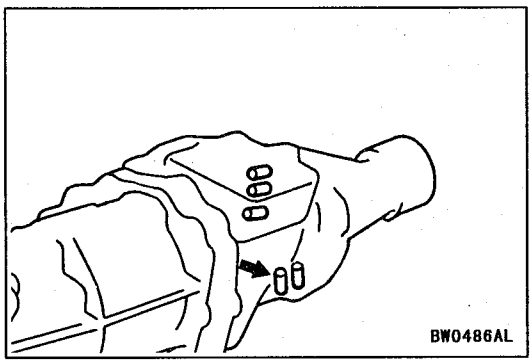

2WD/4WD DETECTION SWITCH CONTINUITY CHECK

Check the continuity between the terminal of the white connector installed in the side of transfer case (shown in the illustration) and the transfer case.

Transfer lever position	Continuity
2H	Continuity
4H	No continuity

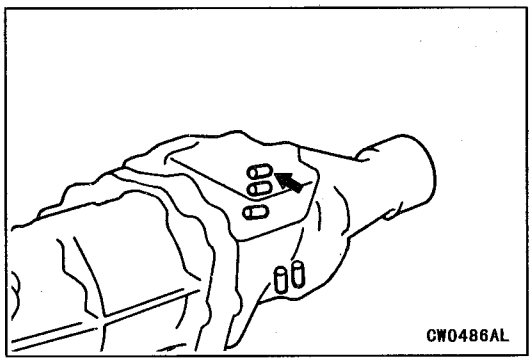

VCU LOCK OPERATION DETECTION SWITCH CONTINUITY CHECK

Check the continuity between the terminal of the brown connector installed in the top of transfer case (shown in the illustration) and the transfer case.

Transfer lever position	Continuity
4H	No continuity
4HLc	Continuity

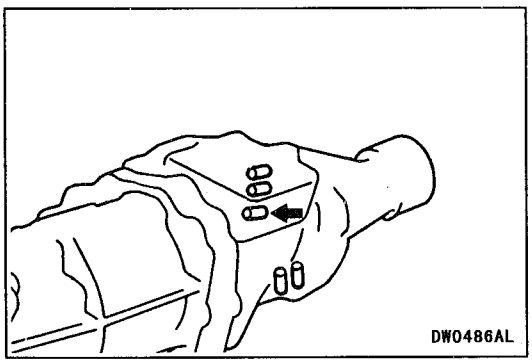

4WD OPERATION DETECTION SWITCH CONTINUITY CHECK

Check the continuity between the terminal of the white connector installed in the top of transfer case (shown in the illustration) and the transfer case.

Transfer lever position	Continuity
2H	No continuity
4H	Continuity

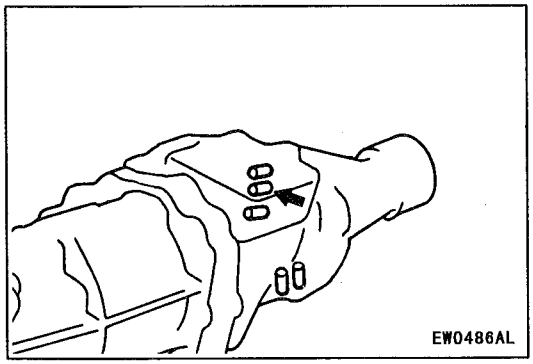

HIGH/LOW DETECTION SWITCH CONTINUITY CHECK

Check the continuity between the terminal of the black connector installed in the top of transfer case (shown in the illustration) and the transfer case.

Transfer lever position	Continuity
4HLc	Continuity
Between 4HLc and 4LLc	No continuity
4LLc	Continuity

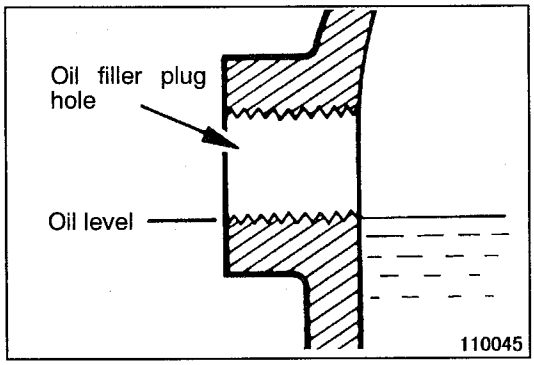

TRANSFER OIL CHECK

1. Remove the oil filler plug.
2. Check that the oil level is at the lower portion of the oil filler plug hole.
3. Check that the oil is not noticeably dirty, and that it has a suitable viscosity.
4. Tighten the oil filler plug to the specified torque.

   Tightening torque: 29 – 34 Nm

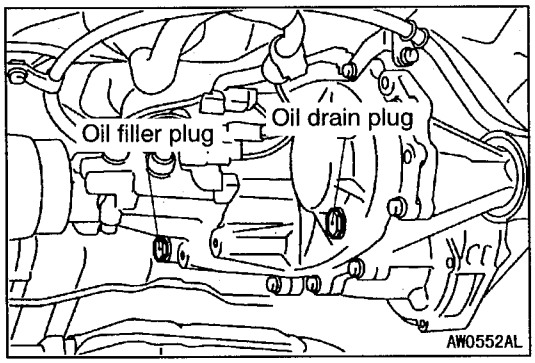

TRANSFER OIL REPLACEMENT

1. Remove the oil drain plug to drain oil.
2. Tighten the oil drain plug to the specified torque.

   Tightening torque: 29 – 34 Nm

3. Remove the oil filler plug and fill with specified oil till the level comes to the lower portion of oil filler plug hole.

   Specified oil:
   Hypoid gear oil SAE 75W – 90, 75W – 85W or 80W conforming to API GL-4

   Quantity: 2.2 ℓ

4. Tighten the oil filler plug to the specified torque.

   Tightening torque: 29 – 34 Nm

A/T CONTROL COMPONENT LOCATION

Name	Symbol	Name	Symbol
Accelerator pedal position sensor (APS) <GDI>	N	Inhibitor switch	E
		Input shaft speed sensor	D
A/T-ECU	M	Output shaft speed sensor	G
A/T fluid temperature sensor	F	Overdrive switch	L
Diagnosis connector	K	Solenoid valves	F
Dual-pressure switch	B	Stop lamp switch	J
Engine ECU	I	Throttle position sensor (TPS) <MPI>	A
Free wheeling engage switch	C	Vehicle speed sensor	H

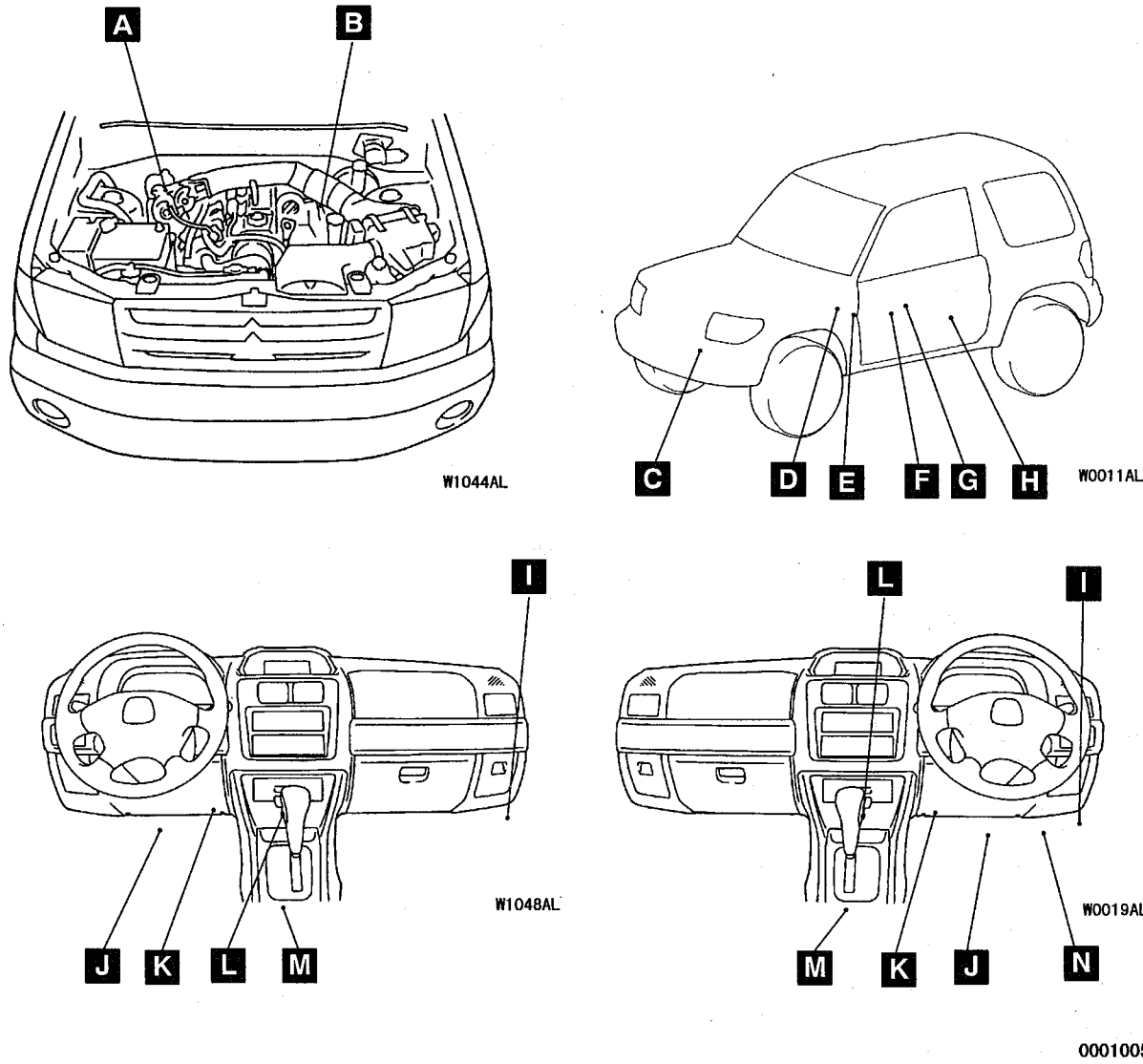

A/T CONTROL COMPONENT CHECK

OVERDRIVE SWITCH CHECK

Refer to P.23-52.

THROTTLE POSITION SENSOR (TPS) CHECK

Refer to GROUP 13B, C – On-vehicle Service.

ACCELERATOR PEDAL POSITION SENSOR (APS) CHECK

Refer to GROUP 13A – On-vehicle Service.

INHIBITOR SWITCH CHECK

Refer to P.23-38.

STOP LAMP SWITCH CHECK

Refer to GROUP 35 – On-vehicle Service.

VEHICLE SPEED SENSOR CHECK

Refer to GROUP 54 – On-vehicle Service.

DUAL-PRESSURE SWITCH CHECK

Refer to GROUP 55 – On-vehicle Service.

FREE WHEELING ENGAGE SWITCH CHECK

Refer to GROUP 26 – On-vehicle Service.

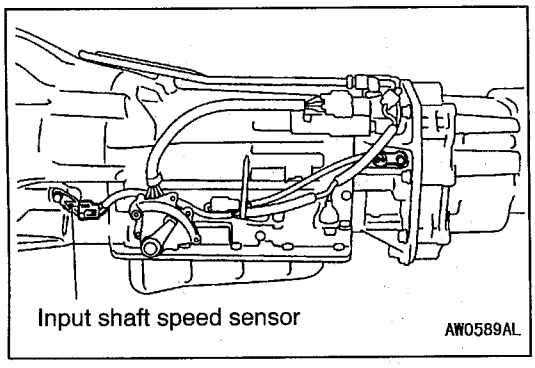

INPUT SHAFT SPEED SENSOR CHECK

1. Disconnect the input shaft speed sensor connector.

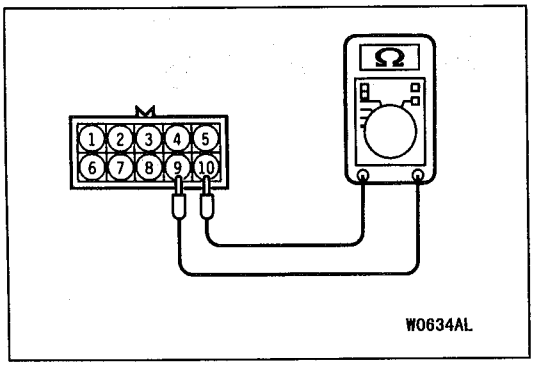

2. Measure the resistance between terminals 9 and 10 of the input shaft speed sensor connector.

   Standard value: 620 ± 60 Ω

3. If the resistance is not within the standard value, replace the input shaft speed sensor.

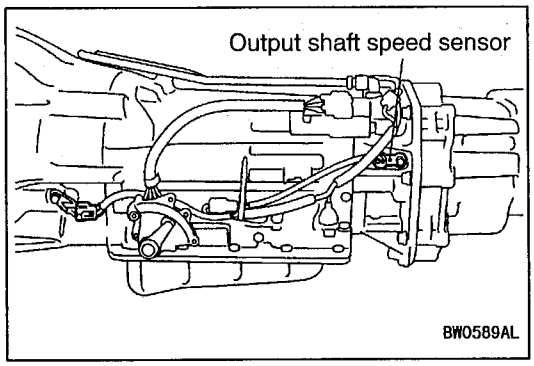

OUTPUT SHAFT SPEED SENSOR CHECK

1. Disconnect the output shaft speed sensor connector.

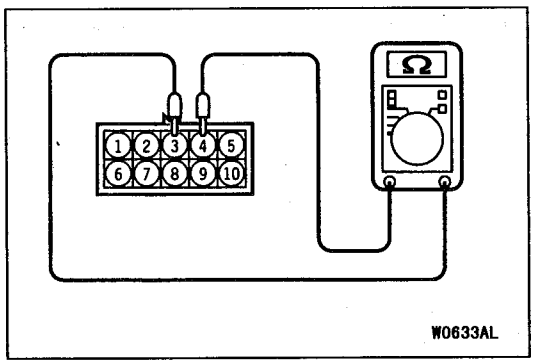

2. Measure the resistance between terminals 3 and 4 of the output shaft speed sensor connector.
   Standard value: 430 ± 43 Ω
3. If the resistance is not within the standard value, replace the output shaft speed sensor.

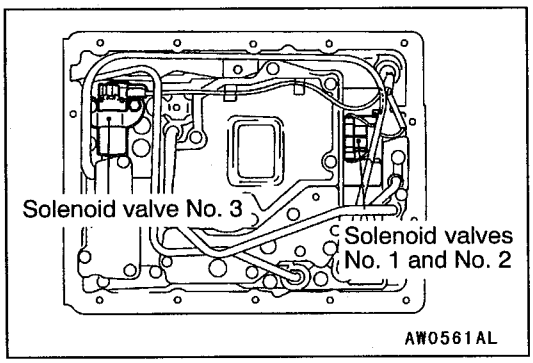

SOLENOID VALVE CHECK

1. Disconnect the solenoid valve connector.

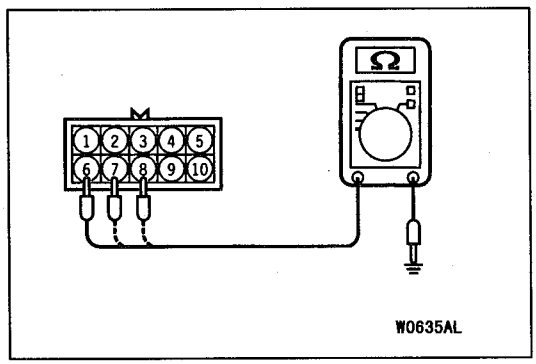

2. Measure the solenoid valve resistance.
   Standard value:

Item	Measurement terminal	Resistance
Solenoid valve No. 1	Between terminal 6 and earth	13 ± 2 Ω (at 25°C)
Solenoid valve No. 2	Between terminal 7 and earth	
Solenoid valve No. 3	Between terminal 8 and earth	

3. If the resistance is not within the standard value, replace the solenoid valve assembly.

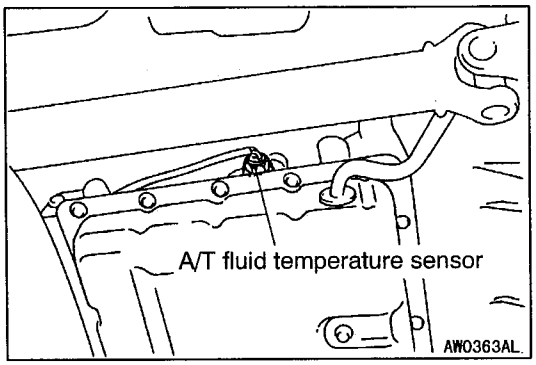

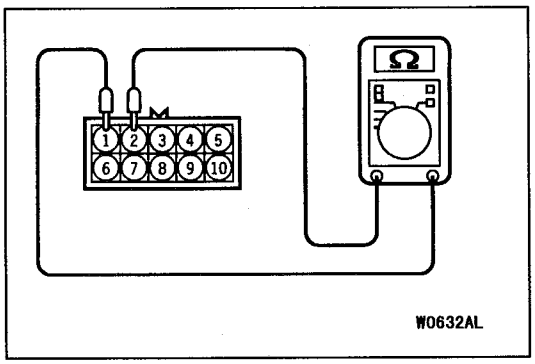

A/T FLUID TEMPERATURE SENSOR CHECK

1. Disconnect the A/T fluid temperature sensor connector.
2. Measure the resistance between terminals 1 and 2 of the A/T fluid temperature sensor connector.

Standard value

Temperature (°C)	Resistance
25	1,100 kΩ
120	57 Ω

3. If the resistance is not the standard value, replace the A/T fluid temperature sensor.

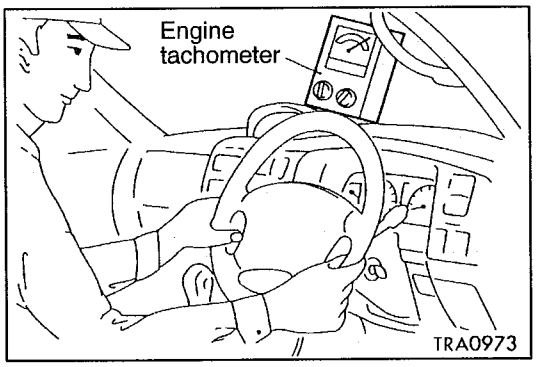

CONVERTER STALL TEST

In this test, the engine maximum speed when the torque converter stalls with the selector lever in the "D" or "R" range is measured to check operation of the torque converter, starter and one-way clutch and check holding performance of the transmission clutch (including brake).

Caution
Do not stand in front or at rear of the vehicle during this test.

1. Check the transmission fluid level. The fluid temperature should be at the level after normal operation (70 – 90°C). The engine coolant temperature should also be at the level after normal operation (80 – 95°C).
2. Apply chocks to the rear wheels (right and left).
3. Mount an engine tachometer.
4. Apply fully the parking and service brakes.
5. Start the engine.
6. With the selector lever in the "D" range, fully depress the accelerator pedal and read off the engine maximum speed.

   NOTE
   When doing so, do not keep the engine running with throttle full open for more than 5 seconds. If two or more stall tests are needed, place the selector lever in the "N" position and run the engine at about 1,000 r/min to allow the transmission fluid to cool before another stall test.

   Standard value:
   <4G1>: 2,030 – 2,330 r/min
   <4G9>: 2,320 – 2,620 r/min
7. Place the selector lever in the "R" range and perform the test as above.

JUDGEMENT OF STALL TEST RESULTS

Stall speed in "D" and "R" range is equal to each other but lower than the nominal value.	(1) Engine output is low. (2) Starter one-way clutch is faulty. (Faulty torque converter is suspected if it is lower than nominal by more than 600 r/min)
Stall speed in "D" range is higher than nominal.	(1) Overdrive clutch slipping (2) Overdrive one-way clutch faulty (3) Forward clutch slipping (4) One-way clutch No. 2 faulty (5) Low line pressure
Stall speed in "R" range is higher than nominal.	(1) Overdrive clutch slipping (2) Overdrive one-way clutch faulty (3) Direct clutch slipping (4) Brake No. 3 slipping (5) Low line pressure

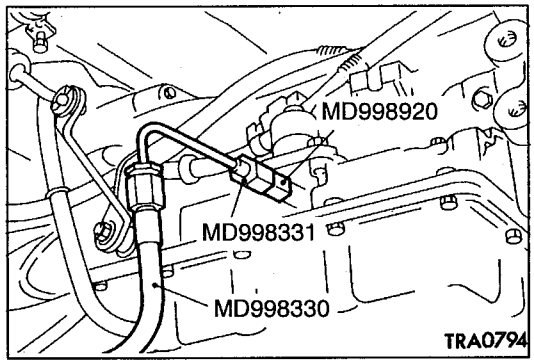

HYDRAULIC PRESSURE TEST

The hydraulic pressure test is important in determining the causes of transmission failures. Before conducting the test, fluid level and condition and throttle cable adjustment, etc. must be checked for defects or abnormalities. When conducting the test, the engine and transmission should be at correct operating temperatures, (engine coolant 80 – 95°C, transmission fluid 70 – 90°C.)

LINE PRESSURE TEST

1. Place the vehicle on a chassis dynamometer.
2. Remove the plug from the line pressure take off port.
3. Install special tools as shown in the figure and place the meter inside vehicle.
4. Apply the parking brake.
5. Start the engine.
6. Place the selector lever in the "D" range.
7. Depress the brake pedal firmly by the left foot and operate the accelerator pedal by the right foot to measure the line pressure at each engine r/min. If the measured pressure is not nominal, check adjustment of the throttle cable and readjust if necessary before conducting the test again.
8. Place the selector lever in the "R" range and test as above.

Standard value:

Items		Line pressure kPa	
		"D" range	"R" range
At idle	4G1	363 – 402	500 – 559
	4G9	373 – 422	520 – 579
At stall	4G1	726 – 824	1,255 – 1,500
	4G9	765 – 863	1,383 – 1,628

JUDGEMENT BY LINE PRESSURE

Hydraulic pressure higher than nominal in all ranges	(1) Regulator valve faulty (2) Throttle valve faulty (3) Throttle cable incorrectly adjusted
Hydraulic pressure lower than nominal in all ranges	(1) Oil pump faulty (2) Regulator valve faulty (3) Throttle valve faulty (4) Throttle cable incorrectly adjusted (5) Overdrive clutch faulty
Hydraulic pressure lower than nominal in "D" range	(1) Large fluid leaks in "D" range hydraulic circuit (2) Forward clutch faulty (3) Overdrive clutch faulty
Hydraulic pressure lower than nominal in "R" range	(1) Large fluid leaks in "R" range hydraulic circuit (2) Brake No. 3 faulty (3) Direct clutch faulty (4) Overdrive clutch faulty

HYDRAULIC CIRCUIT

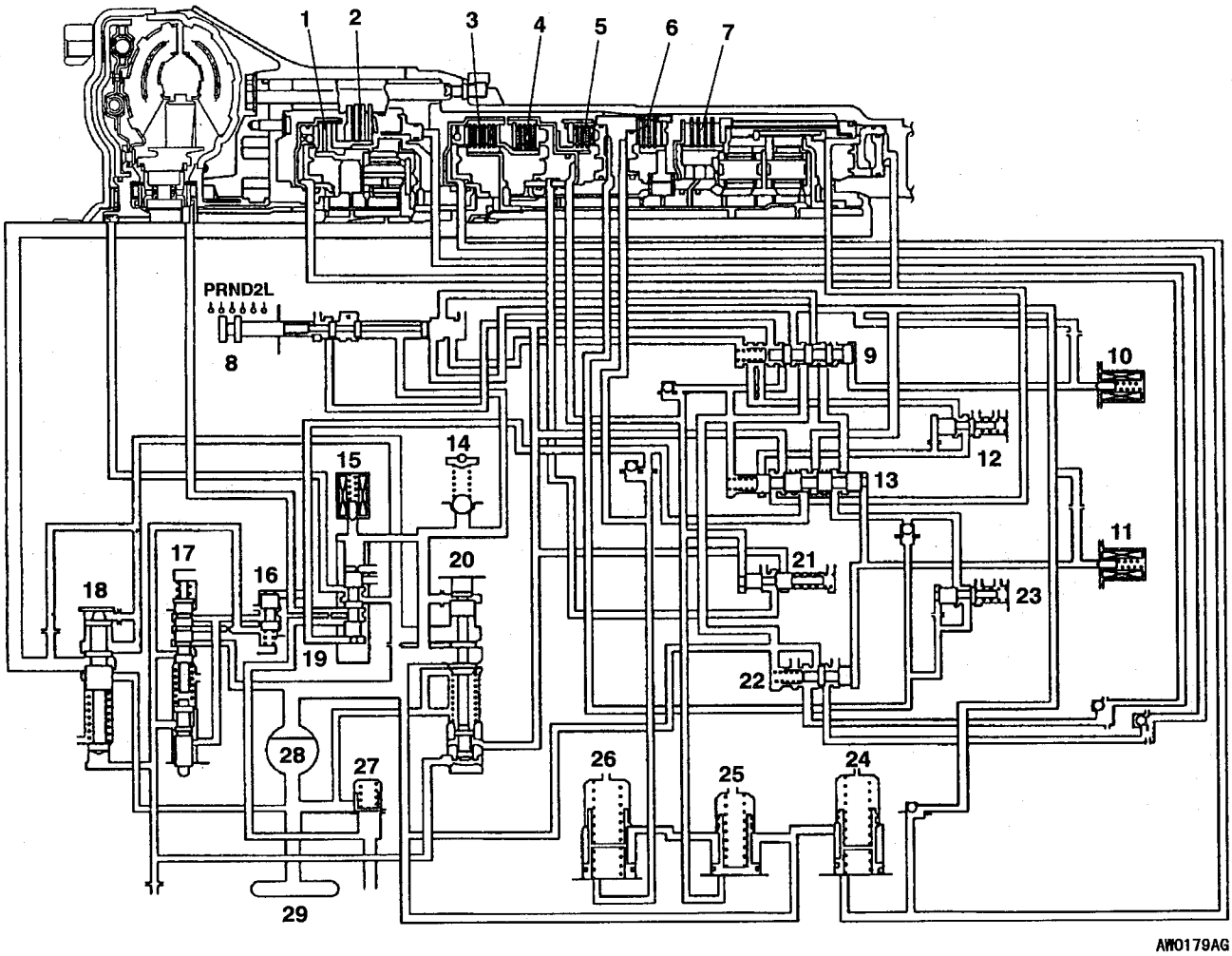

1. Overdrive clutch
2. Overdrive brake
3. Forward clutch
4. Direct clutch
5. Brake No. 1
6. Brake No. 2
7. Brake No. 3
8. Manual valve
9. 2-3 shift valve
10. Solenoid valve No. 1
11. Solenoid valve No. 2
12. Low coast modulator valve
13. 1-2 shift valve
14. Pressure relief valve
15. Solenoid valve No. 3
16. Cut-back valve
17. Throttle valve
18. Secondary regulator valve
19. Lockup control valve
20. Primary regulator valve
21. Reverse clutch sequence valve
22. 3-4 shift valve
23. Intermediate modulator valve
24. Accumulator C1
25. Accumulator C2
26. Accumulator B2
27. Oil cooler bypass valve
28. Oil pump
29. Oil strainer

<Vehicles except for Hong Kong>

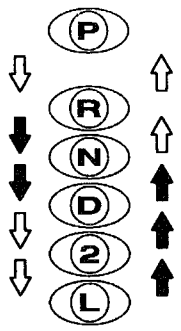

AW1199AL

<Vehicles for Hong Kong>

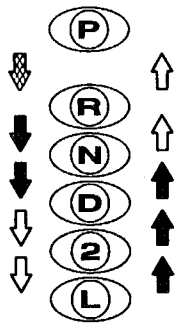

BW1199AL

Turn the ignition switch to any position other than LOCK (OFF), and operate the selector lever with the brake pedal depressed and the push button pushed.

Operate the selector lever without pushing the push button.

Operate the selector lever with the push button pushed.

SELECTOR LEVER OPERATION CHECK

1. Apply the parking brake lever.
2. Move the selector lever from N position to each of D, 2 and L positions to check that the selector lever moves smoothly.
3. Check that the engine starts when the selector lever is in each of N and P positions, and that the engine does not start when the selector lever is in positions other than N and P.
4. Start the engine and release the parking brake. Check that the vehicle moves forward when the selector lever is moved from N position to each of D, 2 and L positions, and moves backward when the selector lever is moved to R position.
5. Stop the engine.
6. Turn the ignition switch to ON position. Check that the backup lamp illuminates and the buzzer sounds when the selector lever is moved from P position to R position.

NOTE
Vehicles for Hong Kong is equipped with the key interlock and shift lock mechanisms. For vehicles for Hong Kong, turn the ignition switch to any position other than LOCK (OFF) and depress the brake pedal when operating the selector lever from P position to other position.

KEY INTERLOCK MECHANISM CHECK <Vehicles for Hong Kong>

1. Carry out the following inspection:

Inspection procedure	Requirements		Normal condition
1	Brake pedal: Depressed	Ignition key: LOCK (OFF) or removed	The selector lever push button can not be pushed, and the selector lever should not be moved from P position.
2		Ignition key: Other than above	If the selector lever push button is pushed, the selector lever can be moved from P position.
3	Brake pedal: Not depressed	Selector lever: Other than P	The ignition key can not be turned to LOCK (OFF) position.
4		Selector lever: P	The ignition key can be turned to LOCK (OFF) position.

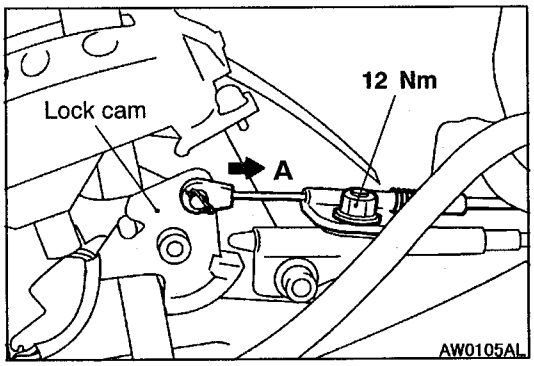

2. If there is a problem on the inspection above, adjust the key interlock cable as follows:
   (1) Remove the rear floor console. (Refer to GROUP 52A.)
   (2) Move the selector lever to P position.
   (3) Turn the ignition key to LOCK (OFF) position.
   (4) Loosen the key interlock cable fixing nut.
   (5) Tighten the key interlock cable fixing nut to the specified torque with the lock cam pushed in the direction A (shown in the illustration).

   Tightening torque: 12 Nm

   (6) Install the rear floor console. (Refer to GROUP 52A.)

SHIFT LOCK MECHANISM CHECK <Vehicles for Hong Kong>

1. Carry out the following inspection:

Inspection procedure	Requirements		Normal condition
1	Brake pedal: Depressed	Ignition key: ACC	If the selector lever push button is not pushed, the selector lever can not be moved from P position.
2			If the selector lever push button is pushed, the selector lever can be moved from P position.
3	Brake pedal: Not depressed		If the selector lever push button is pushed, the selector lever can be moved from R position to P position.

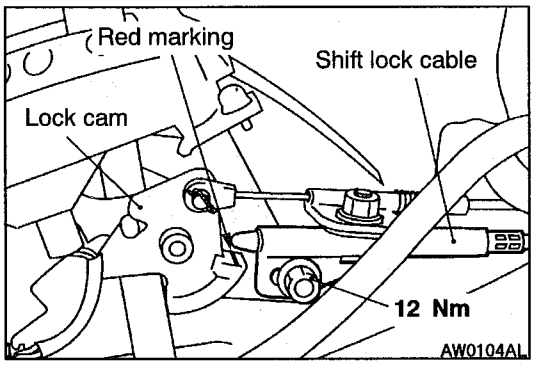

2. If there is a problem on the inspection above, adjust the shift lock cable as follows:
   (1) Remove the rear floor console. (Refer to GROUP 52A.)
   (2) Move the selector lever to P position.
   (3) Loosen the shift lock cable fixing nut.
   (4) Move the shift lock cable to position the shift lock cable end above the red marking painted on the lock cam, and then tighten the shift lock cable fixing nut to the specified torque.

   Tightening torque: 12 Nm

   (5) Install the rear floor console. (Refer to GROUP 52A.)

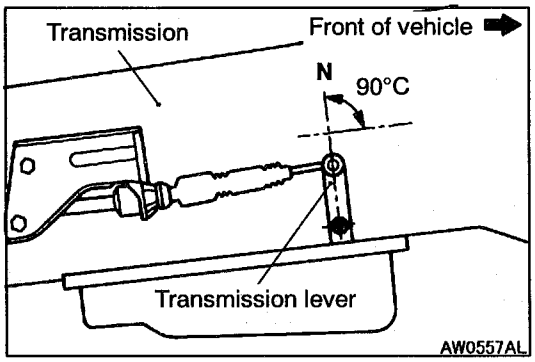

TRANSMISSION CONTROL CABLE ADJUSTMENT

1. Move the selector lever to N position, and set the transmission lever to N position.

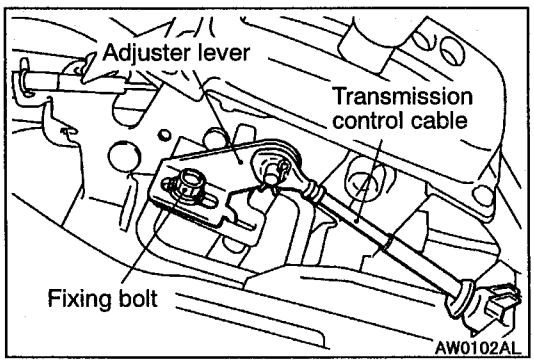

2. Loosen the fixing bolt. Adjust the adjuster lever position so that the transmission control cable will be tight, and then tighten the fixing bolt.

TRANSMISSION CONTROL

REMOVAL AND INSTALLATION

Caution
Do not strike the SRS-ECU when removing and installing the transmission control cable, key interlock cable, shift lever assembly and the A/T-ECU.

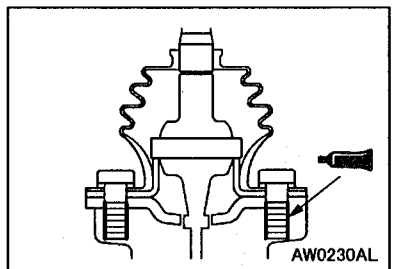

Sealant:
3M Stud Locking No.4170 or equivalent

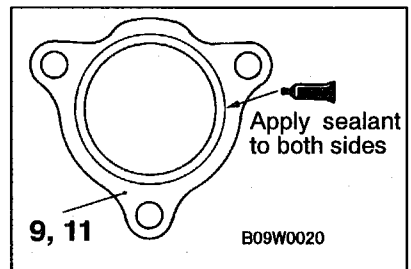

Sealant:
3M ATD Part No.8663 or equivalent

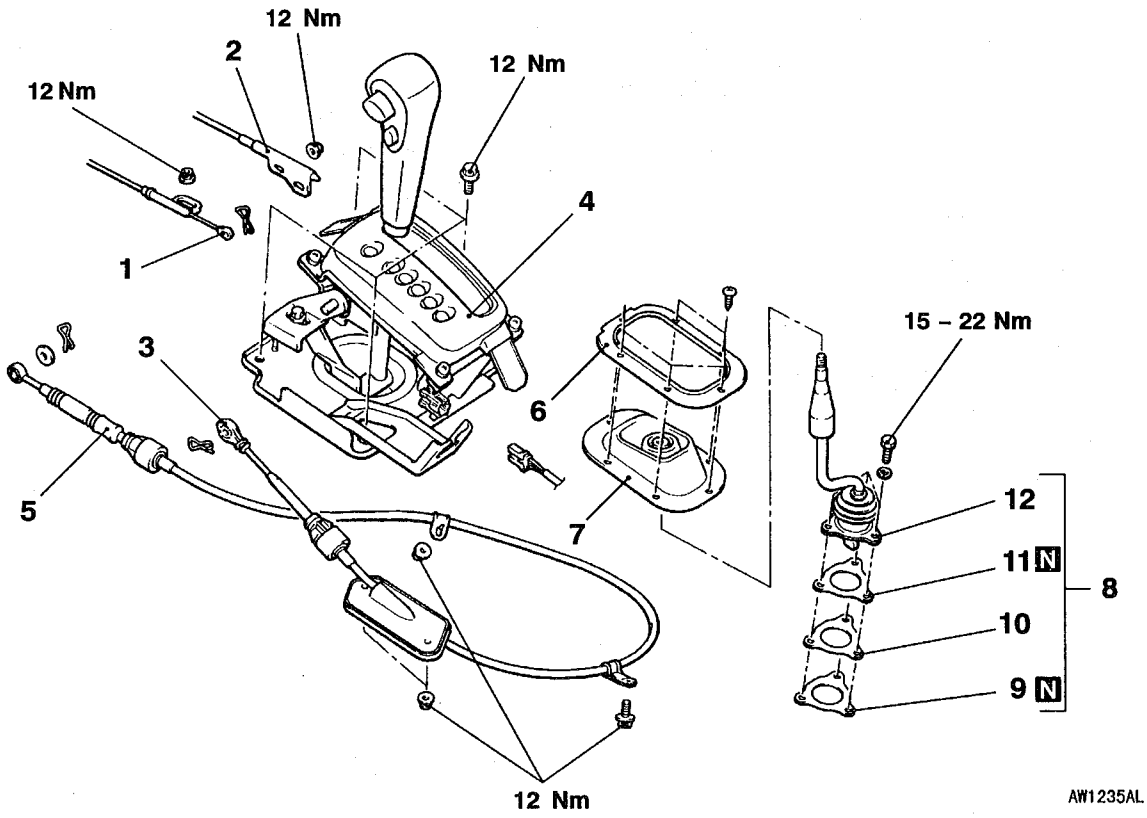

Selector lever assembly and transmission control cable assembly removal steps

- Rear floor console assembly (Refer to GROUP 52A.)

1. Key interlock cable connection <Vehicles for Hong Kong>
2. Shift lock cable connection <Vehicles for Hong Kong>
3. Transmission control cable connection (selector lever side)
4. Selector lever assembly
5. Transmission control cable connection (transmission side)

Transfer control lever assembly removal steps

- Front floor console assembly (Refer to GROUP 52A.)

6. Retainer plate
▶A◀ 7. Transfer lever inner boot
8. Transfer control lever assembly
9. Gasket
10. Stopper plate
11. Gasket
12. Transfer control lever

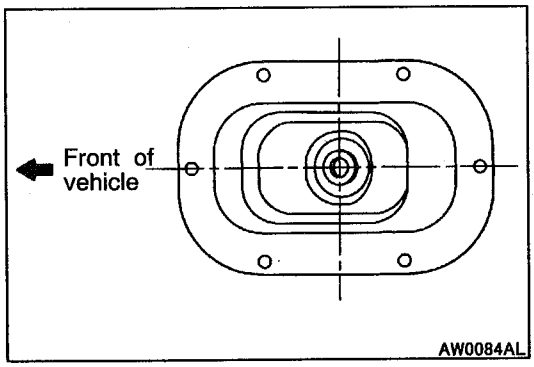

INSTALLATION SERVICE POINT

▶A◀ TRANSFER LEVER INNER BOOT INSTALLATION

Install the transfer lever inner boot as shown in the illustration.

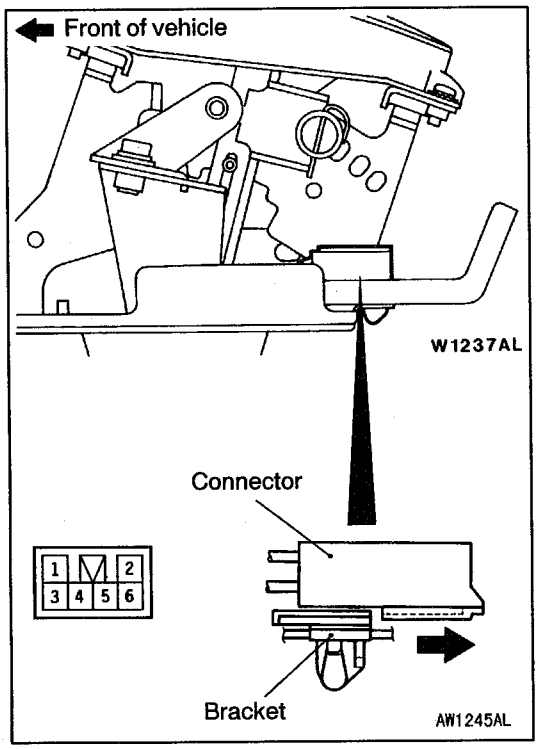

INSPECTION

Slide the connector in the direction of arrow shown in the illustration to remove it from the bracket.

POSITION INDICATOR LAMP CHECK

Check requirement	Terminal No.	
	1	2
Always	○	○

OVERDRIVE SWITCH CHECK

Switch position	Terminal No.		
	3	4	5
ON	○	○	
OFF	○		○

SELECTOR LEVER ASSEMBLY
DISASSEMBLY AND REASSEMBLY

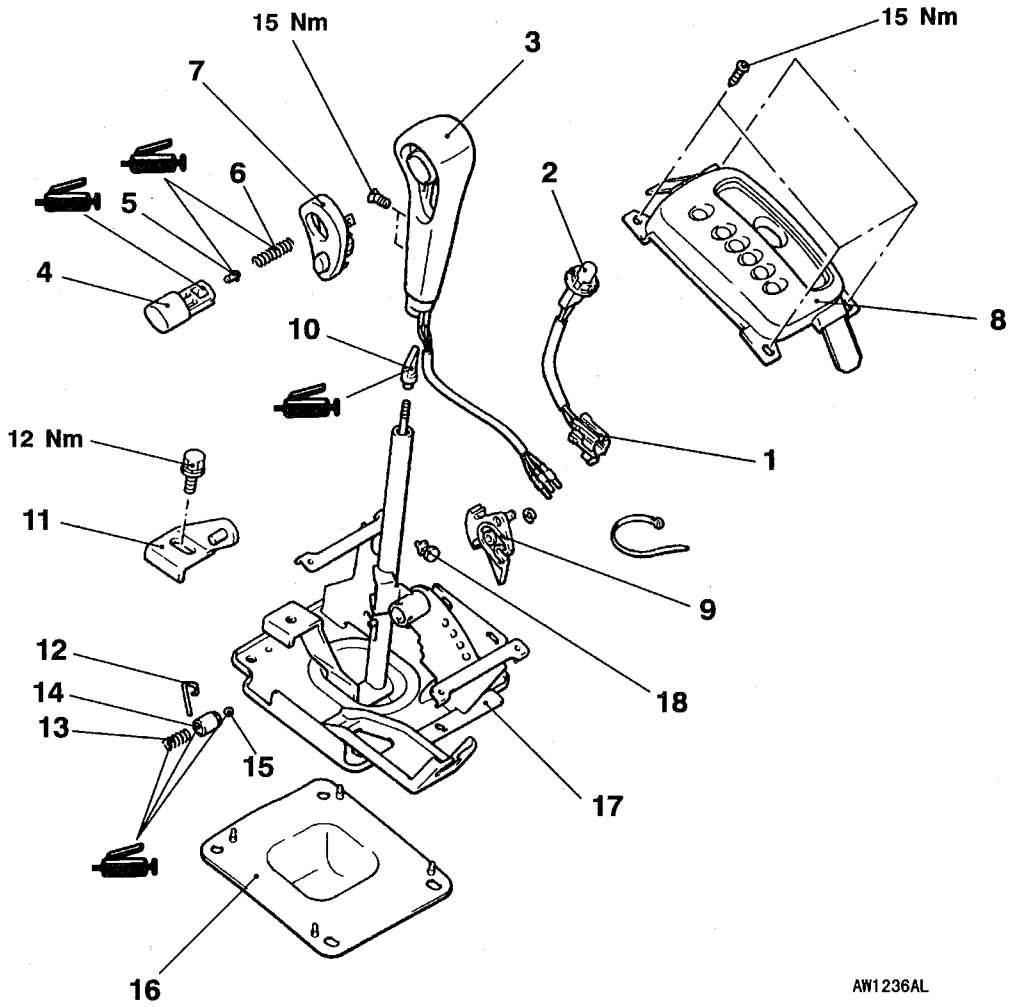

Disassembly steps

◀A▶
1. Position indicator socket assembly
2. Bulb
3. Shift knob
4. Push button
5. Stopper
6. Spring
7. Overdrive switch
8. Indicator panel assembly
9. Lock cam <Vehicles for Hong Kong>

▶A◀
10. Sleeve
11. Adjuster lever
12. Pin
13. Ball spring
14. Ball support
15. Ball
16. Packing
17. Selector lever assembly
18. Stopper

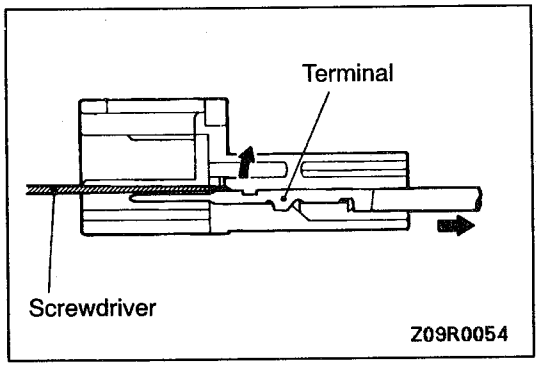

DISASSEMBLY SERVICE POINT

◀A▶ POSITION INDICATOR SOCKET ASSEMBLY REMOVAL

Use a flat-tipped screwdriver, etc. to remove the terminal of shift knob side from the position indicator socket assembly connector.

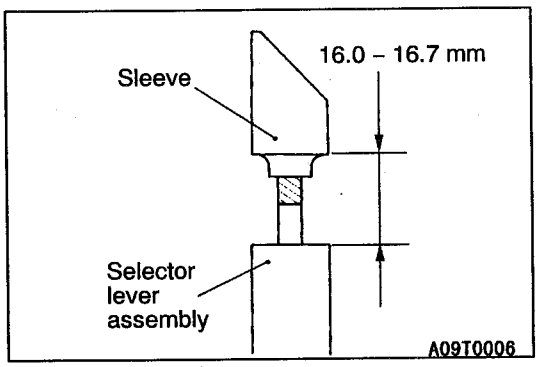

REASSEMBLY SERVICE POINT

▶A◀ SLEEVE INSTALLATION

Shift the selector lever to the N position, and then turn the sleeve so that the clearance between the sleeve and lever assembly end is within the dimension shown in the illustration.

A/T KEY INTERLOCK AND SHIFT LOCK MECHANISMS <VEHICLES FOR HONG KONG>

REMOVAL AND INSTALLATION

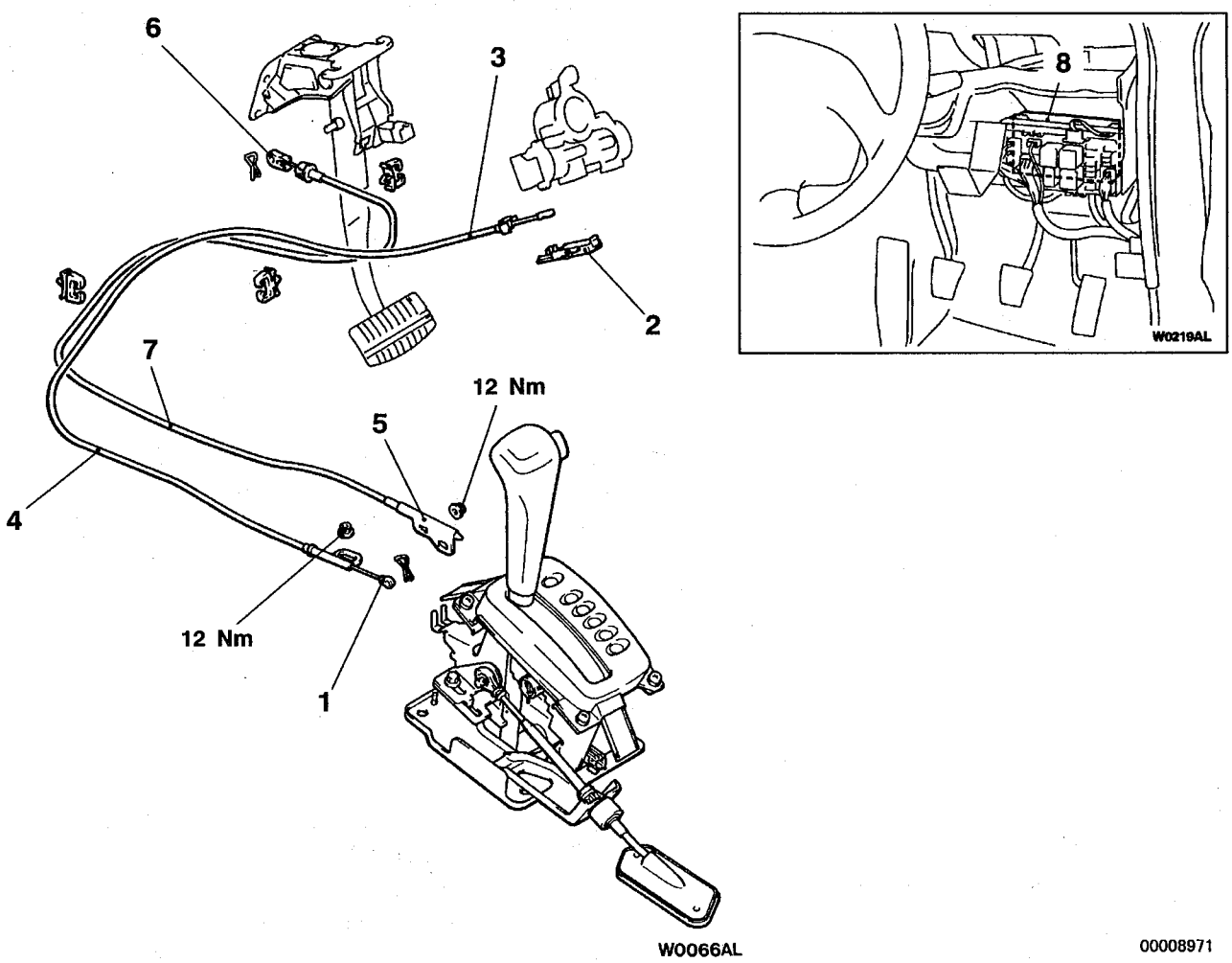

00008971

Key interlock cable removal steps

- Front floor console (Refer to GROUP 52A.)
- Instrument under cover (Refer to GROUP 52A.)
- Lower column cover (Refer to GROUP 37A – Steering Wheel and Shaft.)

▶C◀ 1. Key interlock cable connection (selector lever side)
2. Cover
▶B◀ 3. Key interlock cable connection (steering lock cylinder side)
4. Key interlock cable

Shift lock cable removal steps

- Front floor console (Refer to GROUP 52A.)

▶A◀ 5. Shift lock cable connection (selector lever side)
6. Shift lock cable connection (brake pedal side)
7. Shift lock cable

Reverse (R position) warning buzzer removal steps

8. ETACS-ECU (Refer to GROUP 54 – Ignition Switch and Immobilizer System.)

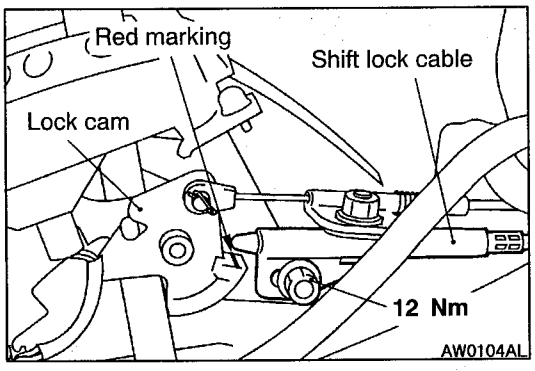

INSTALLATION SERVICE POINTS

▶A◀ SHIFT LOCK CABLE (SELECTOR LEVER SIDE) INSTALLATION

1. Move the selector lever to P position.
2. Move the shift lock cable to position the shift lock cable end above the red marking painted on the lock cam, and then tighten the shift lock cable fixing nut to the specified torque.

   Tightening torque: 12 Nm
3. Check that the shift lock mechanism operates normally. (Refer to P. 23-49.)

▶B◀ KEY INTERLOCK CABLE (STEERING LOCK CYLINDER SIDE) INSTALLATION

Turn the ignition key to LOCK (OFF) position, and then install the key interlock cable.

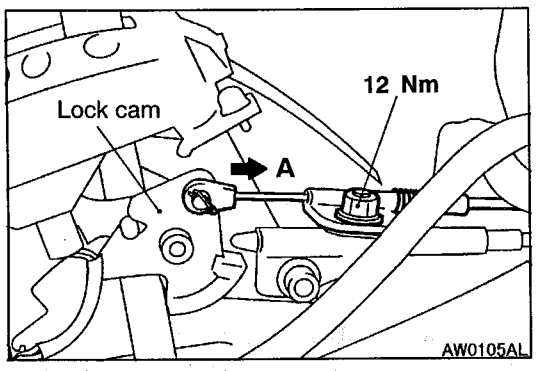

▶C◀ KEY INTERLOCK CABLE (SELECTOR LEVER SIDE) INSTALLATION

1. Move the selector lever to P position.
2. Turn the ignition key to LOCK (OFF) position.
3. Connect the key interlock cable end to the lock cam.
4. Install the key interlock cable temporarily.
5. Tighten the key interlock cable fixing nut to the specified torque with the lock cam pushed in the direction A (shown in the illustration).

   Tightening torque: 12 Nm
6. Check that the key interlock mechanism operates normally. (Refer to P. 23-48.)

TRANSMISSION ASSEMBLY

REMOVAL AND INSTALLATION

Caution
Mounting locations marked by * should be provisionally tightened, and then fully tightened after placing the vehicle horizontally and loading the full weight of the transmission on the vehicle body.

Pre-removal and Post-installation Operation
- Transfer Control Lever Assembly Removal and Installation (Refer to P.23-51.)
- Under Cover Removal and Installation
- Transmission Fluid and Transfer Oil Draining and Filling (Refer to P.23-36, 40.)
- Front and Rear Propeller Shaft Removal and Installation (Refer to GROUP 25.)
- Air Cleaner Removal and Installation (Refer to GROUP 15 – Air Cleaner and Resonance Tank.)
- Front Exhaust Pipe and Catalytic Converter Removal and Installation (Refer to GROUP 15.)
- Vacuum Actuator Assembly Removal and Installation (Refer to GROUP 26 – Main Shaft.)
- Kick-down Cable Adjustment <Only after installation> (Refer to P.23-38.)
- Accelerator Cable Assembly Check and Adjustment <Only after installation> (Refer to GROUP 17 – On-vehicle Service.)

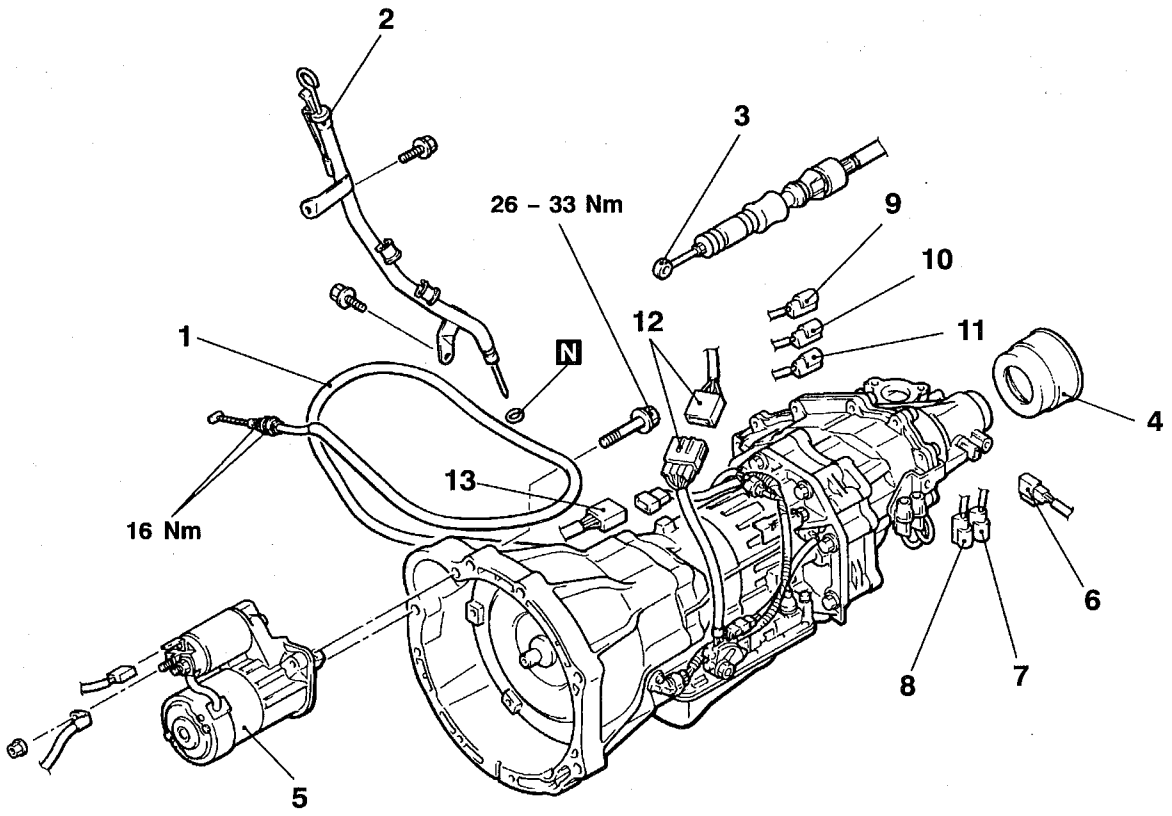

AW1238AL

Removal steps
1. Kick-down cable connection
2. Oil level gauge assembly
3. Transmission control cable connection
4. Dust shield guard
◀A▶ 5. Starter motor
6. Vehicle speed sensor connector
7. VCU lock detection switch connector
8. 2WD/4WD detection switch connector
9. VCU lock operation detection switch connector
10. High/Low detection switch connector
11. 4WD operation detection switch connector
12. Harness connector
13. Inhibitor switch connector

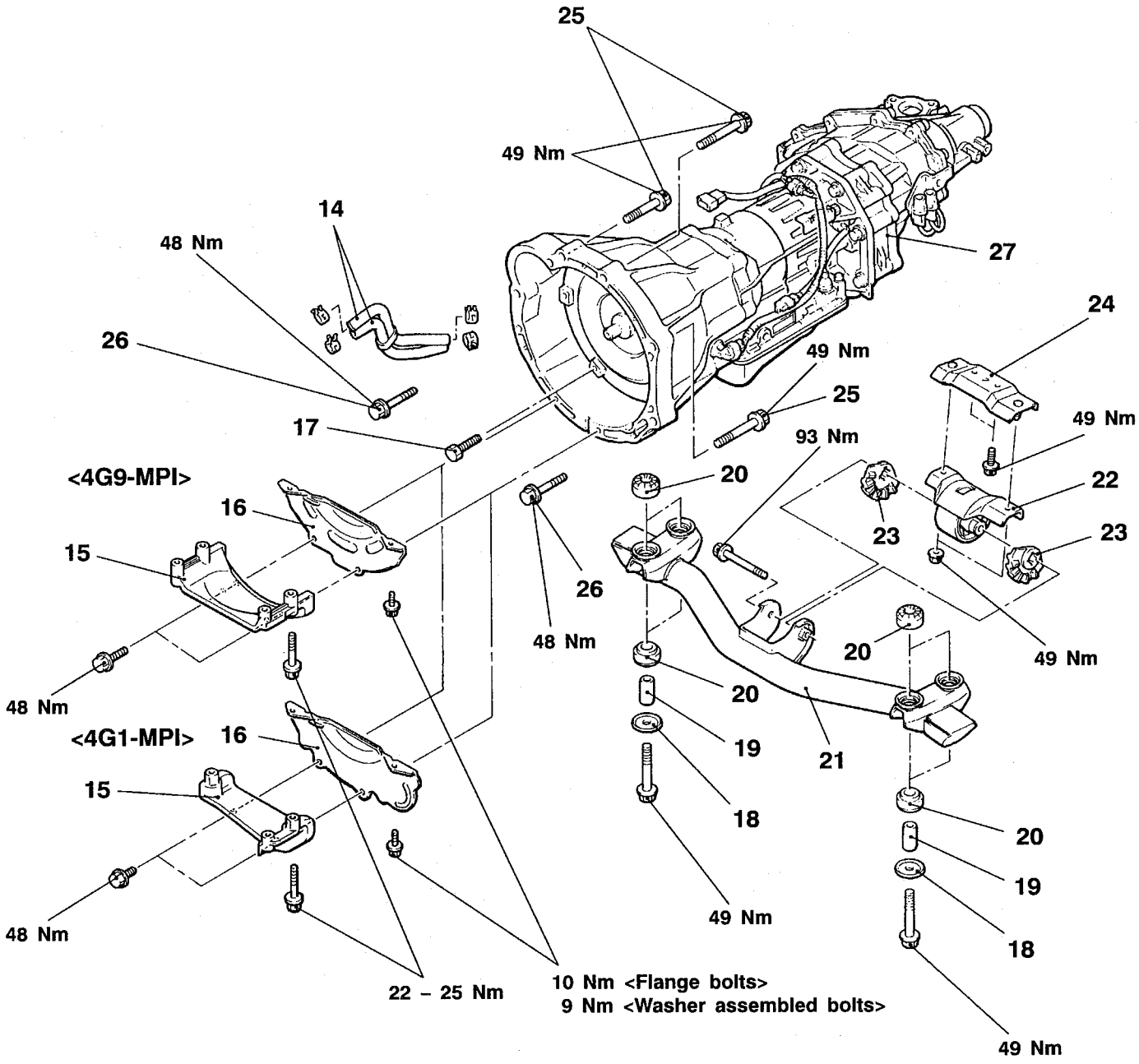

14. Oil cooler hose
    - Oil pan removal <GDI> (Refer to GROUP 11A.)
15. Transmission stay <MPI>
16. Bell housing cover <MPI>
◀B▶ 17. Drive plate connection bolt
    - Support the transmission with a transmission jack
18. Washer
19. Spacer
20. Transmission mount bushing
21. Transmission mount crossmember
22. Transmission mount insulator assembly
▶B◀ 23. Transmission mount stopper
24. Adapter
25. Transmission upper part coupling bolts
26. Transmission lower part coupling bolts
▶A◀ 27. Transmission assembly

REMOVAL SERVICE POINTS

◀A▶ STARTER MOTOR REMOVAL

Remove the starter motor with the starter motor harnesses still connected, and secure it inside the engine compartment.

◀B▶ DRIVE PLATE CONNECTION BOLTS REMOVAL

1. Remove the connection bolts (6 places) while turning the crankshaft.
2. Press in the torque converter to the transmission side so the torque converter does not remain on the engine side.

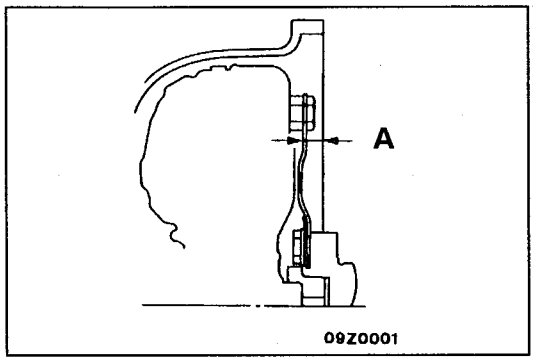

INSTALLATION SERVICE POINTS

▶A◀ TRANSMISSION ASSEMBLY INSTALLATION

Press in the torque converter to the transmission side completely, and then install the transmission assembly to the engine.

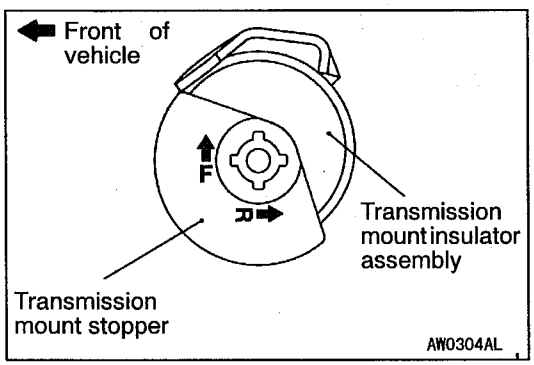

▶B◀ TRANSMISSION MOUNT STOPPER INSTALLATION

1. Install the transmission mount stopper so that the arrow faces the direction shown.

   NOTE
   Disregard F and R stamped as a shared part.

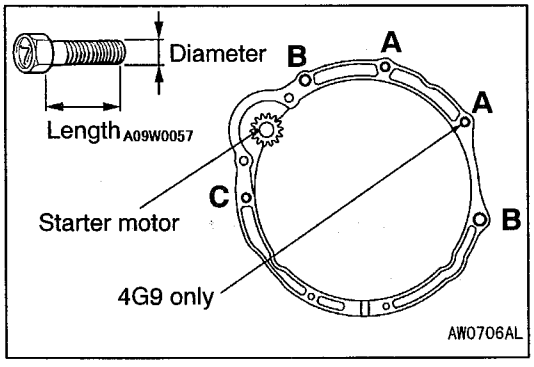

2. The sizes of the mounting bolts are different. So be sure not to confuse them.

Bolt	Diameter x Length mm
A	10 x 50
B	10 x 60
C	10 x 40

TRANSMISSION OIL COOLER

REMOVAL AND INSTALLATION

Pre-removal and Post-installation Operation
- Transmission Fluid Draining and Supplying (Refer to P.23-36.)
- Under Cover Removal and Installation

<4G9>

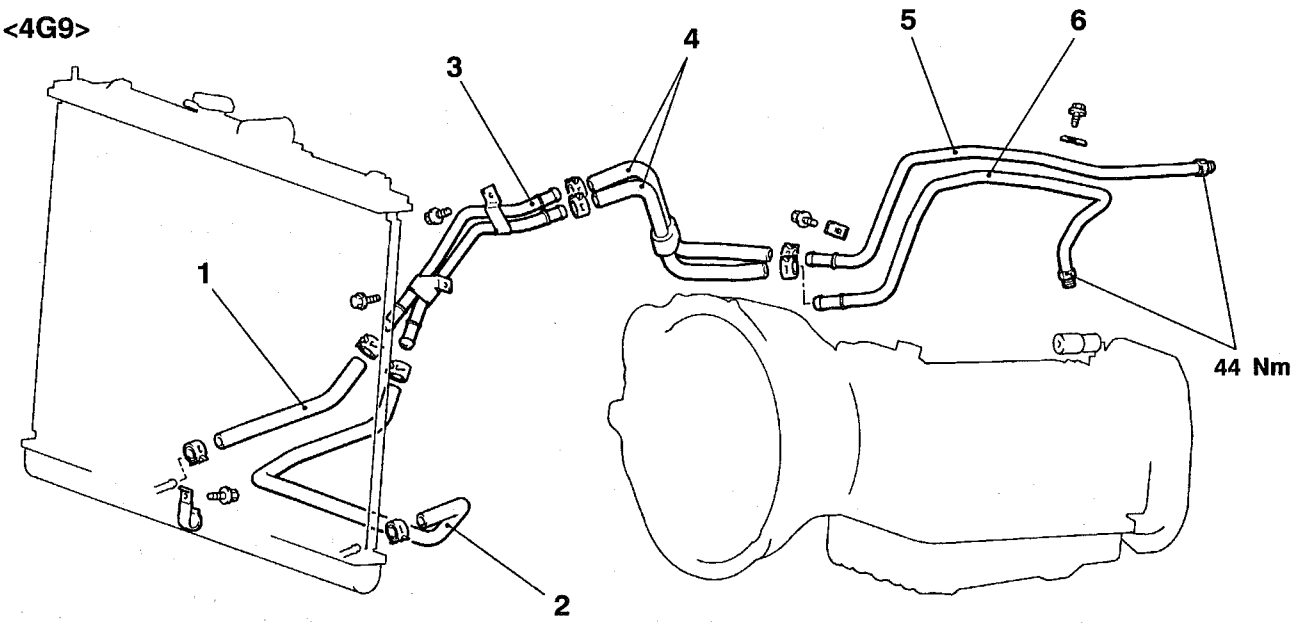

AW0086AL

<4G1>

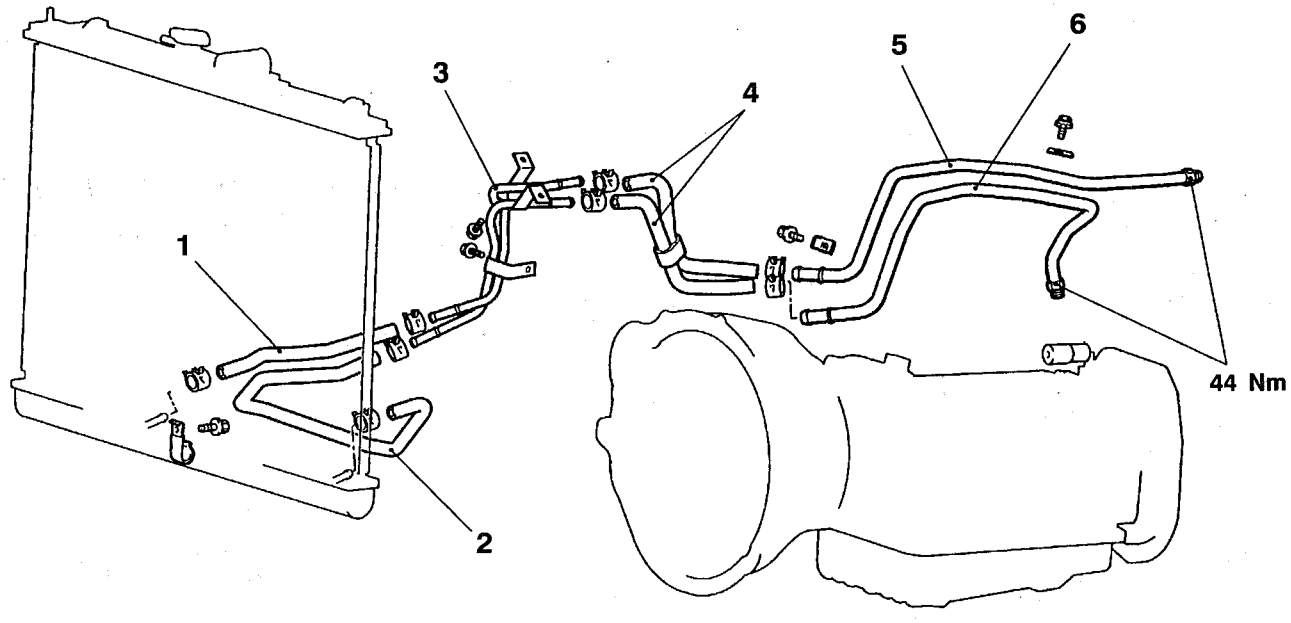

AW1188AL

Removal steps
1. Return hose
2. Feed hose
3. Oil cooler pipe assembly
4. Hose assembly
- Transmission assembly (Refer to P.23-57.)
5. Oil return pipe
6. Oil feed pipe

A/T-ECU

REMOVAL AND INSTALLATION

Caution
Do not strike the G sensor when removing and installing the A/T-ECU.

Pre-removal and Post-installation Operation
Rear Floor Console Removal and Installation

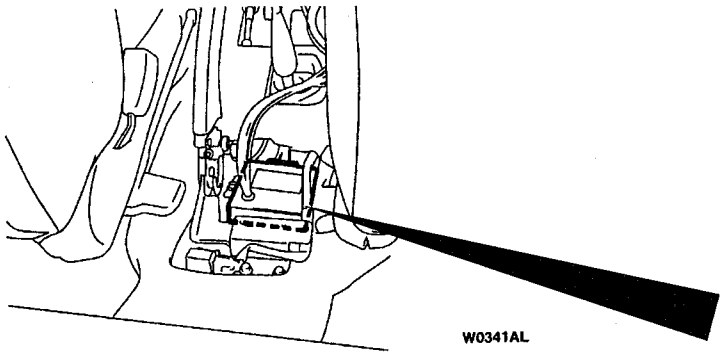

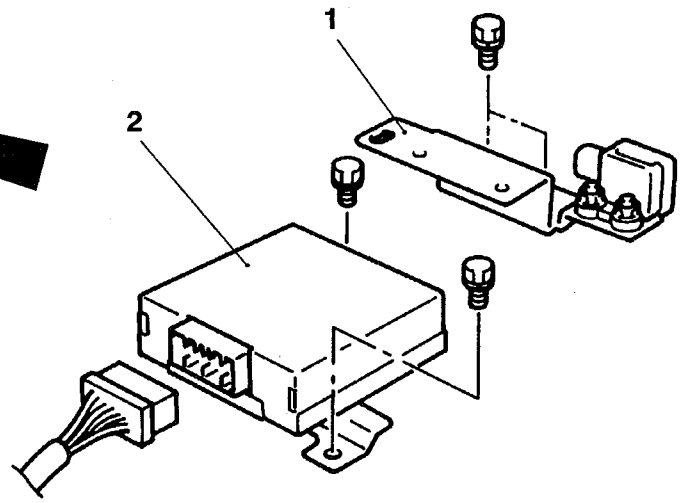

Removal steps
1. Floor console bracket
2. A/T-ECU

4WD INDICATOR CONTROL UNIT

REMOVAL AND INSTALLATION

Refer to GROUP 22.

NOTES

INSPECTION PROCEDURE 11

Slippage (vibration)	Probable cause
Occurs when a clutch or brake does not fully engage due to low hydraulic pressure or a worn facing. Appears as vibration when the problem is slight.	• Malfunction of torque converter • Malfunction of direct clutch • Malfunction of forward clutch • Malfunction of brake No. 2 • Malfunction of one-way clutch No. 1 • Malfunction of overdrive brake • Malfunction of brake No. 3 • Malfunction of one-way clutch No. 2 • Malfunction of brake No. 1 • Malfunction of overdrive one-way clutch

★: Refer to the Transmission Workshop Manual.

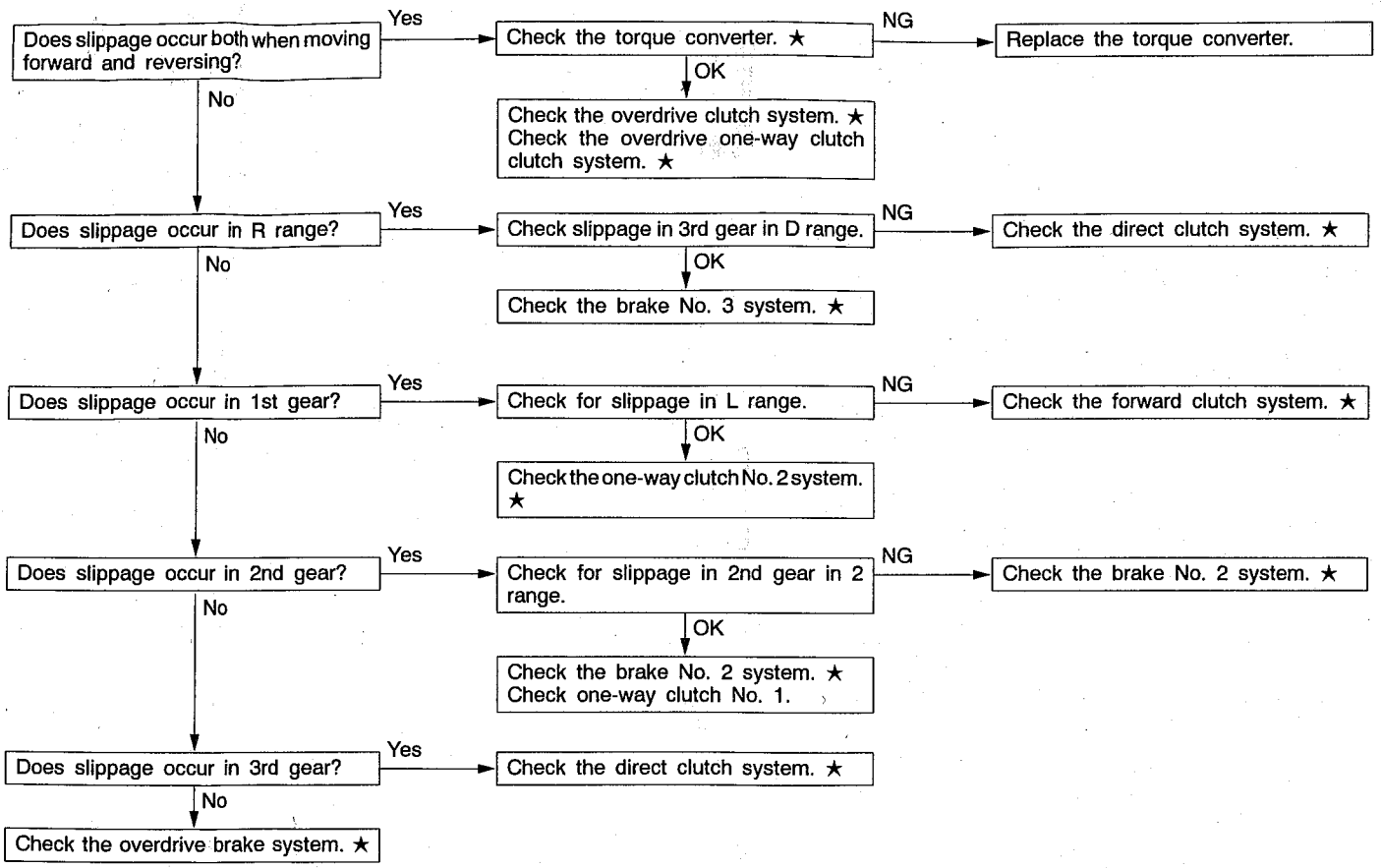

INSPECTION PROCEDURE 12

Lockup abnormality	Probable cause
When lockup does not operate even though in the lockup range, and also when lockup is operating and the engine is idling but then stalls.	• Malfunction of torque converter • Malfunction of valve body

★: Refer to the Transmission Workshop Manual.

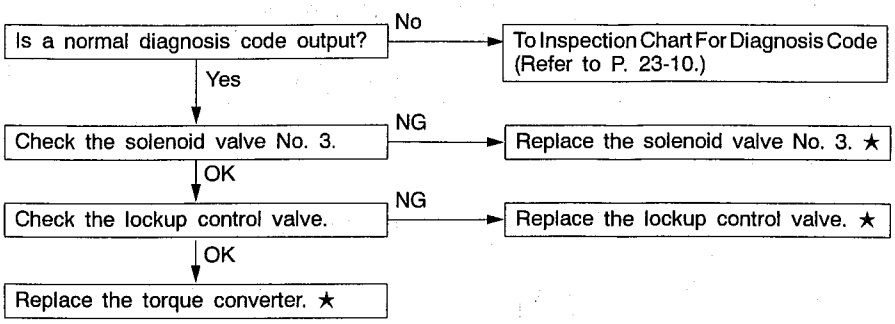

INSPECTION PROCEDURE 13

Abnormal engine braking	Probable cause
Engine braking effectiveness is poor after downshifting has occurred.	• Malfunction of overdrive clutch • Malfunction of brake No. 3 • Malfunction of brake No. 1 • Malfunction of valve body

★: Refer to the Transmission Workshop Manual.

